9520

AMERICAN CARRIER SPECIFICATIONS

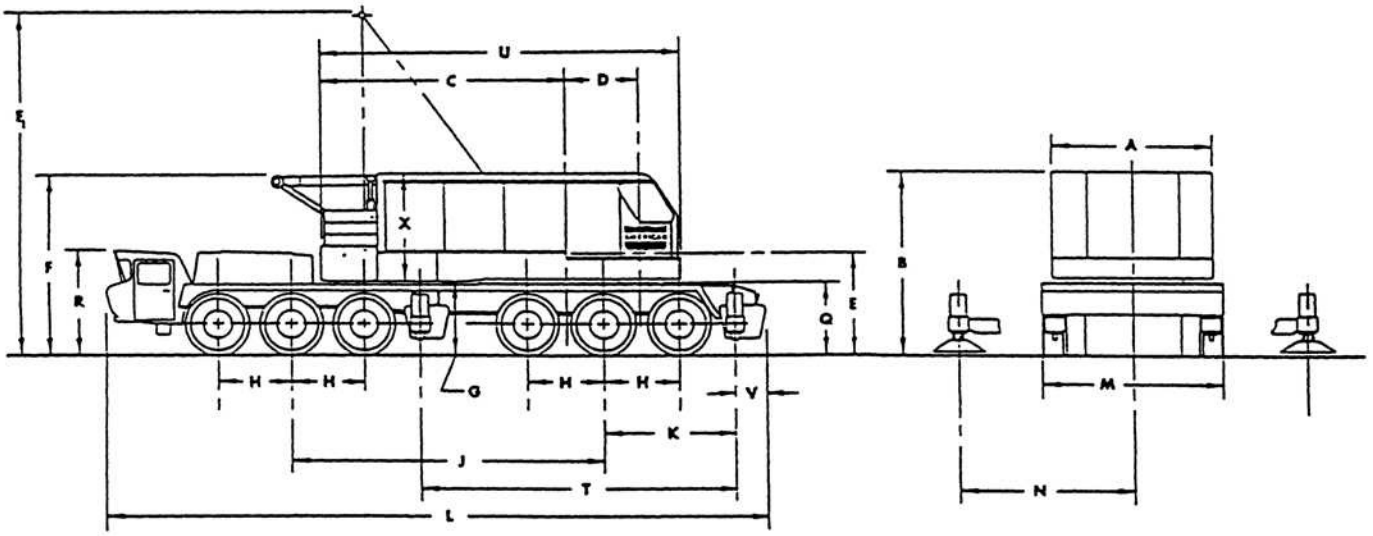

GENERAL DIMENSIONS

A	Width of Cab	11'9"
B	Height to Top of Cab	13'5"
C	Tail Swing	17'7"
D	Centerline of Rotation to Centerline of Boom Foot	5'0-3/4"
E	Ground to Centerline of Boom Foot	7'7-3/4"
F	Height Over A-Frame (Lowered)	13'6-1/2"
F'	Height Over A-Frame (Raised)	29'3"
G	Ground to Bottom of Counterweight	5'7"
H	Distance Between Axles	5'4"
	Centerline of Rotation to Centerline of Rear Bogie	2'7-1/4"
J	Wheel Base	23'2-1/4"
K	Centerline Rear Bogie to Centerline Rear Outrigger	9'10"
L	Overall Length of Carrier	47'
M	Overall Width of Carrier	14'
N	Centerline of Carrier to Centerline of Outrigger	11'6"
Q	Top of Mounting Plate to Ground	5'3"
R	Top of Carrier Cab to Ground	7'7"
T	Centerline Front Outrigger to Center Line Rear Outrigger	22'7"
U	Rear of Counterweight to Front of Cab	25'9"
V	Centerline of Rear Outrigger to End of Carrier	2'3"
X	Bottom of Machinery Deck to Top of Cab	7'6-1/2"
	Turning Radius	57'
	Clearance Under Raised Outrigger Float	4-1/2"
	Clearance Under Equalizer Beam	11"

AMERICAN®

MEETS OR EXCEEDS OSHA'S B30.5 REQUIREMENTS

900 SERIES
MODEL 9520
TRUCK CRANE
with 77S Boom

LIFT RATINGS

With 77S Tubular Hammerhead Boom and "T-U-R" Counterweight (75,000 Lbs.)

Boom Length In Feet	Radius In Feet	Boom Angle Degrees	Outriggers Free		Outriggers Extended and Set		Ft. From Boom Pt. to Ground	Min. Load Line
			Over Side	Over Rear	Over Side	Over Rear		
70 feet	16	82.8	–	146670	400000	400000	78	11
	20	79.5	–	131210	319320	319320	77	9
	25	75.4	–	104260	243480	243480	76	7
	30	71.1	–	83670	195990	195990	75	6
	35	66.7	–	69410	160910	163440	73	5
	40	62.2	49650	58950	131130	139730	70	4
	50	52.4	38480	44590	94720	107470	64	3
	60	41.0	30720	35180	73260	86520	54	3
	70	25.6	24960	28490	59050	71740	38	2
80 feet	17	83.0	–	141670	391110	391110	88	11
	20	80.8	–	130410	319090	319090	88	9
	25	77.2	–	104000	243220	243220	87	7
	30	73.5	–	83400	195710	195710	85	6
	35	69.8	–	69140	160910	163150	84	5
	40	65.9	49190	58680	131080	139430	82	4
	50	57.8	38060	44330	94620	107190	76	3
	60	48.8	30340	34940	73150	86250	68	3
	70	38.2	24650	28290	58960	71530	58	2
	80	23.8	20230	23290	48850	60550	40	2
90 feet	19	82.5	–	133200	339810	339810	98	10
	20	81.9	–	129650	318840	318840	98	9
	25	78.7	–	103730	242940	242940	97	7
	30	75.4	–	83130	195410	195410	96	6
	35	72.1	56380	68860	160860	162840	94	5
	40	68.7	48740	58390	130990	139120	92	4
	50	61.7	37630	44050	94480	106870	88	3
	60	54.2	29940	34670	72990	85950	81	3
	70	45.8	24280	28040	58810	71250	73	2
	80	35.9	19910	23080	48720	60330	61	2
	90	22.4	16410	19200	41150	51850	42	2
100 feet	20	82.7	–	128800	318530	318530	108	9
	25	79.8	–	103400	242580	242580	107	7
	30	76.9	–	82780	195030	195030	106	6
	35	73.9	55830	68510	160760	162450	105	5
	40	70.9	48200	58050	130840	138730	103	4
	50	64.8	37120	43710	94290	106480	99	3
	60	58.2	29450	34330	72770	85560	93	3
	70	51.2	23810	27710	58580	70870	86	2
	80	43.3	19480	22770	48500	59970	77	2
	90	34.0	16030	18930	40950	51550	64	2
	100	21.2	13180	15820	35050	44600	44	2
110 feet	21	82.8	–	124640	299600	299600	118	9
	25	80.7	–	103080	242240	242240	117	7
	30	78.1	–	82450	194660	194660	116	6
	35	75.4	55300	68170	160640	162070	115	5
	40	72.7	47680	57700	130670	138340	114	4
	50	67.2	36620	43370	94070	106080	110	3
110 feet cont.	60	61.4	28970	34000	72530	85160	105	3
	70	55.3	23350	27380	58330	70490	99	2
	80	48.6	19040	22450	48250	59600	91	2
	90	41.2	15610	18630	40710	51200	81	2
	100	32.3	12810	15560	34840	44400	67	2
	110	20.1	10440	13010	30120	38660	46	2
120 feet	22	82.9	–	120320	282720	282720	128	8
	25	81.5	–	102840	241980	241980	127	7
	30	79.1	–	82190	194380	194380	126	6
	35	76.7	54880	67910	160550	161770	125	5
	40	74.2	47270	57430	130550	138030	124	4
	50	69.2	36220	43090	93900	105770	121	3
	60	64.0	28580	33720	72340	84850	116	3
	70	58.5	22980	27110	58130	70180	111	2
	80	52.7	18680	22190	48050	59300	104	2
	90	46.4	15270	18380	40510	50910	95	2
	100	39.3	12490	15320	34650	44210	84	2
	110	30.9	10160	12810	29960	38500	70	2
	120	19.2	8160	10690	26090	33810	47	1
130 feet	24	82.6	–	107760	253860	253860	137	7
	25	82.2	–	102470	241580	241580	137	7
	30	79.9	64090	81820	193960	193960	137	6
	35	77.7	54290	67520	160390	161340	136	5
	40	75.4	46680	57040	130350	137590	134	4
	50	70.8	35660	42700	93650	105320	131	3
	60	66.1	28030	33330	72060	84400	127	3
	70	61.2	22440	26720	57830	69720	122	2
	80	56.0	18160	21810	47740	58850	116	2
	90	50.5	14760	18000	40200	50470	109	2
	100	44.5	12000	14960	34350	43800	99	2
	110	37.7	9700	12460	29660	38210	88	2
	120	29.6	7740	10370	25820	33540	72	1
	130	18.4	6030	8560	22580	29630	49	1
140 feet	25	82.7	–	102120	241200	241200	147	7
	30	80.7	63520	81450	193560	193560	147	6
	35	78.6	53720	67150	160230	160920	146	5
	40	76.5	46130	56670	130140	137160	145	4
	50	72.3	35110	42320	93390	104880	142	3
	60	67.9	27500	32950	71780	93950	138	3
	70	63.4	21920	26340	57530	69280	134	2
	80	58.7	17650	21430	47430	58410	128	2
	90	53.8	14270	17630	39890	50030	121	2
	100	48.5	11520	14590	34030	43370	113	2
	110	42.8	9230	12100	29350	37910	103	2
	120	36.2	7290	10020	25520	33250	91	1
	130	28.5	5620	8250	22310	29360	75	1
	140	17.7	4130	6700	19560	26040	50	1

(Continued)

LIFT RATINGS (cont.)

With 77S Tubular Hammerhead Boom

Boom Length In Feet	Radius In Feet	Boom Angle Degrees	Outriggers Free		Outriggers Extended and Set		Ft. From Boom Pt. to Ground	Min. Load Line
			Over Side	Over Rear	Over Side	Over Rear		
150 feet	26	82.8	–	96900	229580	229580	157	7
	30	81.3	62900	81060	193120	193120	157	6
	35	79.4	53110	66750	160060	160470	156	5
	40	77.4	45530	56260	129920	136700	155	4
	50	73.5	34530	41910	93120	104400	152	3
	60	69.5	26930	32540	71470	83470	149	3
	70	65.3	21360	25930	57210	68800	145	2
	80	61.0	17100	21020	47100	57930	140	2
	90	56.6	13730	17220	39550	49550	134	2
	100	51.8	10980	14190	33690	42890	126	2
	110	46.8	8710	11710	29010	37470	118	2
	120	41.2	6780	9640	25180	32910	107	1
	130	35.0	5130	7880	21980	29030	94	1
	140	27.5	3680	6350	19250	25740	77	1
	150	17.1	2380	5000	16890	22890	52	1
160 feet	27	82.9	–	–	202040	202040	167	6
	30	81.8	–	–	192700	192700	167	6
	35	80.0	–	–	159880	160030	166	5
	40	78.2	–	–	129700	136250	165	4
	50	74.5	–	–	92840	103940	163	3
	60	70.8	–	–	71160	83000	160	3
	70	67.0	–	–	56890	68330	156	2
	80	63.0	–	–	46760	57460	151	2
	90	58.9	–	–	39210	49080	145	2
	100	54.6	–	–	33350	42430	139	2
	110	50.1	–	–	28660	37000	131	1
	120	45.2	–	–	24830	32500	122	1
	130	39.8	–	–	21640	28690	111	1
	140	33.8	–	–	18930	25410	97	1
	150	26.6	–	–	16590	22560	80	1
	160	16.5	–	–	14530	20040	53	1
170 feet	28	83.0	–	–	179030	179030	177	5
	30	82.3	–	–	179030	179030	177	5
	35	80.6	–	–	159670	159670	176	5
	40	78.9	–	–	129500	135880	175	4
	50	75.5	–	–	92600	103550	173	3
	60	72.0	–	–	70900	82610	170	3
	70	68.4	–	–	56600	67920	167	2
	80	64.7	–	–	46470	57060	162	2
	90	60.9	–	–	38910	48680	157	2
	100	57.0	–	–	33040	42030	151	2
	110	52.8	–	–	28360	36610	144	1
	120	48.5	–	–	24530	32100	136	1
	130	43.8	–	–	21340	28300	126	1
	140	38.6	–	–	18630	25040	114	1
	150	32.8	–	–	16300	22200	100	1
	160	25.7	–	–	14270	19710	82	1
	170	16.0	–	–	12460	17470	55	1
180 feet	30	82.7	–	–	160230	160230	187	5
	35	81.1	–	–	159210	159210	186	5
	40	79.5	–	–	129270	135410	186	4
	50	76.3	–	–	92310	103070	183	3
	60	73.0	–	–	70580	82110	181	3
	70	69.6	–	–	56260	67430	177	2
	80	66.2	–	–	46120	56560	173	2
	90	62.7	–	–	38550	48180	168	2
180 feet cont.	100	59.0	–	–	32680	41530	163	2
	110	55.2	–	–	27990	36110	156	1
	120	51.2	–	–	24160	31610	149	1
	130	47.0	–	–	20970	27810	140	1
	140	42.5	–	–	18270	24560	130	1
	150	37.5	–	–	15940	21730	118	1
	160	31.8	–	–	13920	19250	103	1
	170	25.0	–	–	12130	17050	84	1
	180	15.5	–	–	10530	15060	56	1
190 feet	31	82.8	–	–	143210	143210	197	4
	35	81.6	–	–	143210	143210	197	4
	40	80.1	–	–	129040	134950	196	4
	50	77.0	–	–	92030	102600	194	3
	60	73.9	–	–	70260	81630	191	3
	70	70.7	–	–	55930	66940	188	2
	80	67.5	–	–	45770	56070	184	2
	90	64.2	–	–	38190	47700	180	2
	100	60.8	–	–	32320	41040	174	2
	110	57.3	–	–	27630	35630	168	1
	120	53.6	–	–	23800	31130	161	1
	130	49.8	–	–	20600	27330	153	1
	140	45.7	–	–	17900	24080	144	1
	150	41.3	–	–	15580	21260	134	1
	160	36.4	–	–	13560	18790	121	1
	170	30.9	–	–	11780	16600	106	1
	180	24.3	–	–	10200	14640	86	1
	190	15.1	–	–	8770	12860	57	1
200 feet	32	82.9	–	–	129410	129410	207	4
	35	82.0	–	–	129410	129410	207	4
	40	80.6	–	–	128810	129410	206	4
	50	77.7	–	–	91730	102100	204	3
	60	74.7	–	–	69940	81130	201	3
	70	71.7	–	–	55580	66440	198	2
	80	68.7	–	–	45410	55560	195	2
	90	65.6	–	–	37820	47180	191	2
	100	62.4	–	–	31940	40530	186	2
	110	59.1	–	–	27250	35110	180	1
	120	55.7	–	–	23410	30620	174	1
	130	52.2	–	–	20220	26820	166	1
	140	48.4	–	–	17510	23580	158	1
	150	44.5	–	–	15190	20760	148	1
	160	40.2	–	–	13170	18300	137	1
	170	35.5	–	–	11400	16120	124	1
	180	30.1	–	–	9830	14170	108	1
	190	23.7	–	–	8420	12420	88	1
	200	14.7	–	–	7140	10810	59	1
210 feet	33	83.0	–	–	117060	117060	217	4
	35	82.4	–	–	117060	117060	217	4
	40	81.0	–	–	117060	117060	216	4
	50	78.3	–	–	91440	101620	214	3
	60	75.5	–	–	69610	80640	212	3
	70	72.6	–	–	55240	65940	209	2
	80	69.8	–	–	45050	55060	206	2
	90	66.8	–	–	37460	46680	202	2
	100	63.8	–	–	31570	40030	197	2
	110	60.7	–	–	26870	34610	192	1

(Continued)

LIFT RATINGS (cont.)

With 77S Tubular Hammerhead Boom

Boom Length In Feet	Radius In Feet	Boom Angle Degrees	Outriggers Free		Outriggers Extended and Set		Ft. From Boom Pt. to Ground	Min. Load Line
			Over Side	Over Rear	Over Side	Over Rear		
210 feet cont.	120	57.6	–	–	23030	30120	186	1
	130	54.3	–	–	19830	26330	179	1
	140	50.8	–	–	17130	23080	171	1
	150	47.2	–	–	14810	20270	162	1
	160	43.3	–	–	12790	17810	152	1
	170	39.2	–	–	11020	15640	141	1
	180	34.6	–	–	9460	13700	127	1
	190	29.3	–	–	8060	11960	111	1
	200	23.1	–	–	6790	10370	90	1
	210	14.3	–	–	5630	8910	60	1
220 feet	35	82.8	–	–	105440	105440	227	3
	40	81.4	–	–	105040	105040	226	3
	50	78.8	–	–	91160	101200	224	3
	60	76.1	–	–	69310	80210	222	3
	70	73.5	–	–	54920	65500	219	2
	80	70.7	–	–	44730	54620	216	2
	90	67.9	–	–	37120	46240	212	2
	100	65.1	–	–	31230	39580	208	2
	110	62.2	–	–	26530	34170	203	1
	120	59.2	–	–	22690	29670	197	1
	130	56.1	–	–	19490	25880	191	1
	140	52.9	–	–	16780	22640	184	1
	150	49.6	–	–	14460	19830	176	1
	160	46.0	–	–	12450	17370	167	1
	170	42.3	–	–	10680	15200	156	1
	180	38.2	–	–	9120	13270	144	1
	190	33.7	–	–	7720	11530	130	1
	200	28.6	–	–	6470	9960	114	1
	210	22.5	–	–	5320	8530	92	1
	220	14.0	–	–	4270	7200	61	1
230 feet	36	82.8	–	–	96100	96100	237	3
	40	81.8	–	–	96100	96100	236	3
	50	79.3	–	–	90870	94830	235	3
	60	76.8	–	–	68990	79710	232	3
	70	74.2	–	–	54570	65000	230	2
	80	71.6	–	–	44360	54110	227	2

Boom Length In Feet	Radius In Feet	Boom Angle Degrees	Outriggers Free		Outriggers Extended and Set		Ft. From Boom Pt. to Ground	Min. Load Line
			Over Side	Over Rear	Over Side	Over Rear		
230 feet cont.	90	68.9	–	–	36750	45720	223	2
	100	66.2	–	–	30850	39070	219	2
	110	63.5	–	–	26140	33650	214	1
	120	60.7	–	–	22290	29160	209	1
	130	57.8	–	–	19090	25370	203	1
	140	54.8	–	–	16380	22120	196	1
	150	51.7	–	–	14060	19320	189	1
	160	48.4	–	–	12050	16860	180	1
	170	45.0	–	–	10280	14690	171	1
	180	41.3	–	–	8720	12760	160	1
	190	37.3	–	–	7330	11040	148	1
	200	33.0	–	–	6080	9470	133	1
	210	28.0	–	–	4940	8050	116	1
	220	22.0	–	–	3910	6740	94	1
	230	13.7	–	–	2940	5520	62	1
240 feet	37	82.9	–	–	88090	88090	247	3
	40	82.2	–	–	87950	87950	246	3
	50	79.7	–	–	86240	86240	245	3
	60	77.3	–	–	68660	79220	243	3
	70	74.9	–	–	54230	64500	240	2
	80	72.4	–	–	44000	53610	237	2
	90	69.9	–	–	36380	45220	234	2
	100	67.3	–	–	30470	38560	230	2
	110	64.7	–	–	25760	33140	225	1
	120	62.0	–	–	21910	28650	220	1
	130	59.3	–	–	18700	24860	215	1
	140	56.4	–	–	15990	21620	208	1
	150	53.5	–	–	13670	18810	201	1
	160	50.5	–	–	11650	16360	193	1
	170	47.3	–	–	9890	14190	185	1
	180	44.0	–	–	8330	12270	175	1
	190	40.4	–	–	6940	10540	164	1
	200	36.5	–	–	5690	8980	151	1
	210	32.2	–	–	4560	7570	136	1
	220	27.4	–	–	3530	6270	118	1
	230	21.5	–	–	2580	5080	96	1
	240	13.4	–	–	–	3950	63	1

9520.39

LIFT RATINGS

With 77S Tapered Tip Boom and "T-U-R" Counterweight (75,000 Lbs.)

Boom Length In Feet	Radius In Feet	Boom Angle Degrees	Outriggers Free		Outriggers Extended and Set		Ft. From Boom Pt. to Ground	Min. Load Line
			Over Side	Over Rear	Over Side	Over Rear		
100 feet	21	80.8	–	129970	222850	222850	106	6
	25	78.5	–	106560	222850	222850	106	6
	30	75.6	–	86120	198730	198730	104	6
	35	72.6	–	71980	163860	166360	103	5
	40	69.6	–	61610	134130	142790	101	4
	50	63.3	41680	47400	97810	110750	97	3
	60	56.7	34100	38120	76440	89980	91	3
	70	49.5	28530	31570	62350	75410	84	3
	80	41.5	24260	26700	52360	64610	74	2
	90	31.9	20860	22910	44880	55710	60	2
	100	18.3	18080	19870	39060	48610	39	2

Boom Length In Feet	Radius In Feet	Boom Angle Degrees	Outriggers Free		Outriggers Extended and Set		Ft. From Boom Pt. to Ground	Min. Load Line
			Over Side	Over Rear	Over Side	Over Rear		
110 feet	23	80.6	–	117160	222850	222850	116	6
	25	79.6	–	106180	222850	222850	116	6
	30	76.9	–	85740	198300	198300	115	6
	35	74.2	–	71600	163710	165920	113	5
	40	71.5	–	61230	133940	142350	112	4
	50	65.9	41140	47030	97580	110310	108	3
	60	60.0	33570	37750	76180	89550	103	3
	70	53.8	28020	31210	62080	74980	96	3
	80	47.1	23770	26340	52080	64190	88	2
	90	39.5	20400	22570	44610	55440	77	2
	100	30.3	17650	19550	38800	48350	63	2
	110	17.5	15340	17060	34140	42680	41	2

LIFT RATINGS (cont.)

With 77S Tapered Tip Boom

Boom Length In Feet	Radius In Feet	Boom Angle Degrees	Outriggers Free		Outriggers Extended and Set		Ft. From Boom Pt. to Ground	Min. Load Line
			Over Side	Over Rear	Over Side	Over Rear		
120 feet	24	80.9	–	111050	222850	222850	126	6
	25	80.4	–	105820	222850	222850	126	6
	30	78.0	–	85370	197870	197870	125	6
	35	75.6	–	71230	163540	165490	124	5
	40	73.1	–	60860	133740	141910	122	4
	50	68.0	40610	46660	97330	109880	119	3
	60	62.8	33060	37390	75920	89120	114	3
	70	57.2	27530	30850	61810	74560	108	3
	80	51.4	23290	25990	51800	63770	101	2
	90	44.9	19930	22220	44320	55160	92	2
	100	37.7	17200	19220	38520	48070	81	2
	110	29.0	14920	16750	33880	42420	66	2
	120	16.7	12980	14670	30060	37780	42	2
130 feet	26	80.7	–	100620	222850	222850	136	6
	30	78.9	–	84960	197390	197390	135	6
	35	76.7	–	70810	163350	165000	134	5
	40	74.4	50920	60440	133510	141430	133	4
	50	69.8	40030	46250	97050	109390	130	3
	60	65.0	32500	36980	75620	88630	125	3
	70	60.0	26980	30450	61490	74080	120	2
	80	54.8	22750	25590	51470	63300	114	2
	90	49.2	19410	21830	43990	54840	106	2
	100	43.1	16690	18830	38190	47750	96	2
	110	36.2	14430	16370	33550	42100	84	2
	120	27.9	12520	14320	29750	37480	68	2
	130	16.0	10860	12560	26570	33610	43	1
140 feet	27	81.0	–	95830	222850	222850	146	6
	30	79.7	–	84560	196930	196930	145	6
	35	77.7	–	70410	163150	164540	144	5
	40	75.5	50340	60040	133270	140960	143	4
	50	71.3	39460	45850	96770	108920	140	3
	60	66.9	31950	36580	75310	88160	136	3
	70	62.4	26450	30050	61170	73610	132	2
	80	57.6	22230	25200	51150	62830	126	2
	90	52.6	18900	21440	43670	54520	119	2
	100	47.3	16190	18450	37860	47430	110	2
	110	41.4	13940	16000	33230	41770	100	2
	120	34.8	12040	13960	29430	37160	87	2
	130	26.8	10410	12220	26260	33310	71	1
	140	15.5	8970	10710	23560	30040	45	1
150 feet	29	80.8	–	87710	204540	204540	156	6
	30	80.4	–	84240	196550	196550	155	6
	35	78.5	–	70080	162970	164150	155	5
	40	76.5	49870	59710	133060	140570	153	4
	50	72.6	39000	45510	96530	108530	151	3
	60	68.5	31500	36250	75050	87760	147	3
	70	64.3	26000	29720	60900	73210	143	2
	80	60.0	21790	24870	50870	62440	138	2
	90	55.5	18470	21120	43380	54140	131	2
	100	50.7	15770	18130	37580	47150	124	2
	110	45.6	13530	15680	32940	41500	115	2
	120	40.0	11640	13640	29150	36880	104	1
	130	33.6	10020	11920	25990	33040	91	1
	140	25.9	8610	10430	23300	29790	73	1
	150	14.9	7350	9110	20980	26980	46	1

Boom Length In Feet	Radius In Feet	Boom Angle Degrees	Outriggers Free		Outriggers Extended and Set		Ft. From Boom Pt. to Ground	Min. Load Line
			Over Side	Over Rear	Over Side	Over Rear		
160 feet	31	80.7	–	–	188630	188630	165	6
	35	79.2	–	–	162760	163650	165	5
	40	77.4	–	–	132810	140060	164	4
	50	73.7	–	–	96230	108020	161	3
	60	69.9	–	–	74720	87260	158	3
	70	66.1	–	–	60560	72700	154	2
	80	62.1	–	–	50520	61930	149	2
	90	57.9	–	–	43030	53640	143	2
	100	53.6	–	–	37220	46790	136	2
	110	49.0	–	–	32580	41140	128	2
	120	44.1	–	–	28790	36520	119	1
	130	38.7	–	–	25630	32680	108	1
	140	32.5	–	–	22950	29440	94	1
	150	25.1	–	–	20640	26650	75	1
	160	14.5	–	–	18630	24210	47	1
170 feet	32	80.9	–	–	177650	177650	175	5
	35	79.9	–	–	162530	163160	175	5
	40	78.1	–	–	132550	139570	174	4
	50	74.7	–	–	95930	107520	172	3
	60	71.1	–	–	74400	86760	168	3
	70	67.5	–	–	60220	72210	165	2
	80	63.8	–	–	50170	61440	160	2
	90	60.0	–	–	42670	53140	155	2
	100	56.1	–	–	36860	46440	149	2
	110	51.9	–	–	32220	40780	141	2
	120	47.5	–	–	28430	36170	133	1
	130	42.7	–	–	25270	32330	123	1
	140	37.5	–	–	22590	29080	111	1
	150	31.5	–	–	20290	26300	96	1
	160	24.3	–	–	18290	23880	78	1
	170	14.0	–	–	16520	21750	49	1
180 feet	34	80.7	–	–	160050	160050	185	5
	35	80.4	–	–	160050	160050	185	5
	40	78.8	–	–	132280	139050	184	4
	50	75.5	–	–	95610	107000	182	3
	60	72.2	–	–	74060	86230	179	3
	70	68.9	–	–	59860	71680	175	2
	80	65.4	–	–	49800	60920	171	2
	90	61.8	–	–	42290	52620	166	2
	100	58.2	–	–	36480	46040	160	2
	110	54.3	–	–	31840	40400	154	2
	120	50.3	–	–	28040	35790	146	1
	130	46.0	–	–	24880	31950	137	1
	140	41.4	–	–	22210	28700	127	1
	150	36.4	–	–	19910	25920	114	1
	160	30.6	–	–	17910	23510	99	1
	170	23.6	–	–	16160	21390	80	1
	180	13.6	–	–	14590	19500	50	1
190 feet	35	80.9	–	–	143040	143040	195	4
	40	79.4	–	–	132010	138540	194	4
	50	76.3	–	–	95300	106490	192	3
	60	73.2	–	–	73720	85720	189	3
	70	70.0	–	–	59510	71170	186	2
	80	66.8	–	–	49430	60400	182	2
	90	63.4	–	–	41920	52110	178	2
	100	60.0	–	–	36100	45530	172	2

(Continued)

LIFT RATINGS (cont.)

With 77S Tapered Tip Boom

Boom Length In Feet	Radius In Feet	Boom Angle Degrees	Outriggers Free		Outriggers Extended and Set		Ft. From Boom Pt. to Ground	Min. Load Line
			Over Side	Over Rear	Over Side	Over Rear		
190 feet cont.	110	56.5	–	–	31460	40030	166	2
	120	52.8	–	–	27660	35410	159	1
	130	48.9	–	–	24500	31570	151	1
	140	44.7	–	–	21820	28320	141	1
	150	40.3	–	–	19530	25540	130	1
	160	35.4	–	–	17540	23130	118	1
	170	29.8	–	–	15790	21020	102	1
	180	23.0	–	–	14230	19150	82	1
	190	13.3	–	–	12840	17470	51	1
200 feet	37	80.8	–	–	129630	129630	205	4
	40	79.9	–	–	129630	129630	204	4
	50	77.0	–	–	95010	106040	202	3
	60	74.1	–	–	73410	85270	200	3
	70	71.1	–	–	59180	70720	197	2
	80	68.0	–	–	49110	59950	193	2
	90	64.9	–	–	41590	51660	189	2
	100	61.7	–	–	35760	45080	184	2
	110	58.4	–	–	31120	39690	178	2
	120	54.9	–	–	27320	35070	171	1
	130	51.3	–	–	24160	31230	164	1
	140	47.6	–	–	21480	27980	155	1
	150	43.6	–	–	19190	25200	145	1
	160	39.2	–	–	17200	22790	134	1
	170	34.4	–	–	15450	20680	121	1
	180	29.0	–	–	13900	18820	105	1
	190	22.4	–	–	12520	17150	84	1
	200	12.9	–	–	11270	15650	52	1
210 feet	38	81.0	–	–	117860	117860	215	4
	40	80.4	–	–	117860	117860	215	4
	50	77.6	–	–	94690	105510	213	3
	60	74.8	–	–	73060	84740	210	3
	70	72.0	–	–	58820	70190	207	2
	80	69.1	–	–	48730	59420	204	2
	90	66.1	–	–	41210	51130	200	2
	100	63.1	–	–	35370	44550	195	2
	110	60.0	–	–	30720	39190	189	2
	120	56.8	–	–	26920	34680	183	1
	130	53.5	–	–	23760	30830	176	1
	140	50.0	–	–	21080	27590	168	1
	150	46.4	–	–	18790	24810	160	1
	160	42.5	–	–	16800	22400	149	1
	170	38.2	–	–	15050	20290	138	1
	180	33.6	–	–	13510	18430	124	1
	190	28.3	–	–	12130	16770	107	1
	200	21.8	–	–	10890	15280	86	1
	210	12.6	–	–	9760	13870	53	1
220 feet	40	80.9	–	–	106150	106150	225	3
	50	78.2	–	–	94370	105000	223	3
	60	75.5	–	–	72720	84230	221	3
	70	72.8	–	–	58460	69670	218	2
	80	70.1	–	–	48360	58900	214	2
	90	67.3	–	–	40830	50610	211	2
	100	64.4	–	–	34990	44030	206	2
	110	61.5	–	–	30330	38680	201	2
	120	58.5	–	–	26530	34230	195	1
	130	55.4	–	–	23370	30450	189	1

Boom Length In Feet	Radius In Feet	Boom Angle Degrees	Outriggers Free		Outriggers Extended and Set		Ft. From Boom Pt. to Ground	Min. Load Line
			Over Side	Over Rear	Over Side	Over Rear		
220 feet cont.	140	52.2	–	–	20690	27200	181	1
	150	48.8	–	–	18390	24420	173	1
	160	45.2	–	–	16400	22010	164	1
	170	41.4	–	–	14660	19900	153	1
	180	37.3	–	–	13120	18040	141	1
	190	32.8	–	–	11740	16340	127	1
	200	27.6	–	–	10510	14800	110	1
	210	21.3	–	–	9390	13400	88	1
	220	12.3	–	–	8360	12110	54	1
230 feet	42	80.8	–	–	96790	96790	235	3
	50	78.7	–	–	94040	96410	233	3
	60	76.2	–	–	72360	83690	231	3
	70	73.6	–	–	58090	69130	228	2
	80	71.0	–	–	47980	58360	225	2
	90	68.3	–	–	40440	50070	221	2
	100	65.6	–	–	34590	43490	217	2
	110	62.9	–	–	29930	38140	212	2
	120	60.0	–	–	26130	33700	207	1
	130	57.1	–	–	22960	29950	201	1
	140	54.1	–	–	20280	26750	194	1
	150	50.9	–	–	17990	23980	186	1
	160	47.7	–	–	16000	21560	178	1
	170	44.2	–	–	14250	19420	168	1
	180	40.5	–	–	12710	17520	157	1
	190	36.5	–	–	11340	15820	144	1
	200	32.1	–	–	10110	14290	130	1
	210	27.0	–	–	8990	12890	112	1
	220	20.9	–	–	7980	11620	89	1
	230	12.0	–	–	7040	10440	56	1
240 feet	43	80.9	–	–	88680	88680	245	3
	50	79.2	–	–	88090	88090	243	3
	60	76.8	–	–	72010	83160	241	3
	70	74.3	–	–	57720	68610	239	2
	80	71.8	–	–	47600	57840	236	2
	90	69.3	–	–	40050	49550	232	2
	100	66.7	–	–	34200	42960	228	2
	110	64.1	–	–	29540	37610	223	2
	120	61.4	–	–	25730	33170	218	1
	130	58.6	–	–	22560	29430	212	1
	140	55.8	–	–	19880	26220	206	1
	150	52.8	–	–	17580	23460	199	1
	160	49.8	–	–	15590	21040	191	1
	170	46.6	–	–	13850	18900	182	1
	180	43.2	–	–	12310	17010	172	1
	190	39.6	–	–	10930	15310	161	1
	200	35.7	–	–	9700	13780	148	1
	210	31.4	–	–	8590	12390	132	1
	220	26.4	–	–	7580	11120	114	1
	230	20.4	–	–	6660	9960	91	1
	240	11.8	–	–	5800	8870	57	1
250 feet	45	80.8	–	–	81560	81560	254	3
	50	79.6	–	–	80940	80940	253	3
	60	77.3	–	–	71680	79040	251	3
	70	74.9	–	–	57380	68130	249	2
	80	72.6	–	–	47240	57360	246	2
	90	70.1	–	–	39690	49070	243	2

(Continued)

LIFT RATINGS (cont.)

With 77S Tapered Tip Boom

Boom Length In Feet	Radius In Feet	Boom Angle Degrees	Outriggers Free		Outriggers Extended and Set		Ft. From Boom Pt. to Ground	Min. Load Line
			Over Side	Over Rear	Over Side	Over Rear		
250 feet cont.	100	67.7	–	–	33840	42490	239	2
	110	65.2	–	–	29170	37130	234	1
	120	62.6	–	–	25360	32690	230	1
	130	60.0	–	–	22190	28950	224	1
	140	57.3	–	–	19510	25750	218	1
	150	54.6	–	–	17210	22980	211	1
	160	51.7	–	–	15220	20560	204	1
	170	48.7	–	–	13470	18430	195	1
	180	45.6	–	–	11930	16540	186	1
	190	42.3	–	–	10560	14840	176	1
	200	38.8	–	–	9330	13310	164	1
	210	34.9	–	–	8220	11930	151	1
	220	30.7	–	–	7220	10670	135	1
	230	25.9	–	–	6300	9510	117	1
	240	20.0	–	–	5450	8440	93	1
	250	11.6	–	–	4660	7440	58	1
260 feet	46	80.9	–	–	75180	75180	264	3
	50	80.0	–	–	74320	74320	264	3
	60	77.8	–	–	71040	71040	262	2
	70	75.5	–	–	57010	67590	259	2
	80	73.2	–	–	46860	56820	257	2
	90	70.9	–	–	39300	48530	253	2
	100	68.6	–	–	33440	41950	250	2
	110	66.2	–	–	28770	36590	245	1
	120	63.8	–	–	24950	32150	241	1
	130	61.3	–	–	21780	28410	236	1
	140	58.7	–	–	19090	25210	230	1
	150	56.1	–	–	16790	22450	223	1
	160	53.4	–	–	14800	20030	216	1
	170	50.6	–	–	13060	17900	209	1
	180	47.7	–	–	11520	16000	200	1
	190	44.7	–	–	10150	14310	190	1
	200	41.4	–	–	8920	12780	180	1
	210	38.0	–	–	7810	11400	168	1
	220	34.2	–	–	6800	10140	154	1
	230	30.1	–	–	5890	8990	138	1
	240	25.4	–	–	5040	7930	119	1
	250	19.6	–	–	4260	6950	95	1
	260	11.3	–	–	3530	6020	59	1
270 feet	48	80.8	–	–	67230	67230	274	2
	50	80.4	–	–	66880	66880	274	2
	60	78.3	–	–	65470	65470	272	2
	70	76.1	–	–	56640	63470	270	2
	80	73.9	–	–	46480	56290	267	2
	90	71.7	–	–	38910	48000	264	2
	100	69.4	–	–	33040	41420	260	2
	110	67.1	–	–	28370	36060	256	1
	120	64.8	–	–	24550	31620	252	1
	130	62.4	–	–	21370	27880	247	1
	140	60.0	–	–	18690	24680	241	1
	150	57.5	–	–	16380	21920	235	1
	160	55.0	–	–	14390	19500	229	1
	170	52.3	–	–	12650	17370	221	1
	180	49.6	–	–	11110	15480	213	1
	190	46.8	–	–	9730	13790	204	1
	200	43.8	–	–	8510	12260	194	1
	210	40.6	–	–	7400	10880	183	1
270 feet cont.	220	37.2	–	–	6390	9630	171	1
	230	33.6	–	–	5480	8480	157	1
	240	29.5	–	–	4640	7420	141	1
	250	24.9	–	–	3860	6440	121	1
	260	19.2	–	–	3140	5530	96	1
	270	11.1	–	–	2470	4680	60	1
280 feet	49	81.0	–	–	62020	62020	284	2
	50	80.8	–	–	61710	61710	284	2
	60	78.7	–	–	60330	60330	282	2
	70	76.6	–	–	56260	58390	280	2
	80	74.5	–	–	46090	55750	277	2
	90	72.3	–	–	38510	47450	274	2
	100	70.2	–	–	32640	40870	271	2
	110	68.0	–	–	27960	35520	267	1
	120	65.8	–	–	24140	31080	263	1
	130	63.5	–	–	20960	27340	258	1
	140	61.2	–	–	18270	24140	253	1
	150	58.8	–	–	15970	21370	247	1
	160	56.4	–	–	13970	18960	241	1
	170	53.9	–	–	12220	16830	234	1
	180	51.3	–	–	10680	14940	226	1
	190	48.7	–	–	9310	13250	218	1
	200	45.9	–	–	8080	11730	209	1
	210	43.0	–	–	6980	10350	198	1
	220	39.9	–	–	5970	9090	187	1
	230	36.5	–	–	5060	7950	174	1
	240	33.0	–	–	4220	6890	160	1
	250	29.0	–	–	3450	5920	143	1
	260	24.4	–	–	2730	5010	123	1
	270	18.9	–	–	2070	4170	98	1
	280	10.9	–	–	–	3370	61	1
290 feet	51	80.9	–	–	57250	57250	294	2
	60	79.1	–	–	55590	55590	292	2
	70	77.1	–	–	54000	54000	290	2
	80	75.0	–	–	45710	51990	288	2
	90	73.0	–	–	38120	46920	285	2
	100	70.9	–	–	32240	40330	282	2
	110	68.8	–	–	27550	34980	278	1
	120	66.7	–	–	23730	30540	274	1
	130	64.5	–	–	20540	26800	269	1
	140	62.3	–	–	17850	23600	264	1
	150	60.0	–	–	15550	20840	259	1
	160	57.7	–	–	13550	18420	253	1
	170	55.3	–	–	11810	16300	246	1
	180	52.9	–	–	10260	14410	239	1
	190	50.4	–	–	8890	12720	231	1
	200	47.8	–	–	7660	11200	222	1
	210	45.0	–	–	6560	9820	213	1
	220	42.2	–	–	5550	8570	202	1
	230	39.1	–	–	4640	7420	191	1
	240	35.9	–	–	3800	6370	178	1
	250	32.4	–	–	3030	5400	163	1
	260	28.5	–	–	2320	4500	146	1
	270	24.0	–	–	1660	3660	125	1
	280	18.5	–	–	–	2880	100	1
	290	10.7	–	–	–	2130	62	1

9520.40

CRANE RATING DATA

Load ratings are in pounds and do not exceed 85% of the load which would cause tipping with crane standing level on firm uniformly supporting surface. Safe loads depend on ground conditions, boom length, radius of operation, and proper handling, all of which must be taken into consideration by user.

Tire inflation pressure for "Free Ratings" is 100 P.S.I. Free ratings do not exceed maximum permissible tire load. Tire pressure shall be reduced for over-the-road travel.

Approved working areas "Free Over Side" and "Free Over Rear" are shown under Diagram No. 1. Approved working areas "Outriggers Extended and Set Over Side or Rear" are shown under Diagram No. 2.

"Radius in feet" is the horizontal distance at crane base level from center of rotation to a vertical line through the center of gravity of the suspended load.

Lifting is approved only in those areas for which ratings are shown in the rating chart. Blocks, slings, buckets, and other load carrying devices are considered part of the load. Retractable A-frame must be in fully raised position for all ratings. Ratings in shaded areas are limited by strength of material or factors other than stability.

Main load line is 1-1/8 inch diameter with a minimum breaking strength of 130,000 pounds. Boom suspension line is 7/8 inch diameter with a minimum breaking strength of 79,600 pounds. Boom suspension pendants are 1-3/8 inch diameter with a minimum breaking strength of 211,000 pounds.

Boom and jib erection is over the rear of the machine with outriggers extended and set and with "Lift Rating" counterweight. A-frame must be fully raised and blocks, slings and other load carrying devices must be on the ground.

Compliance to B30.5 based on AMERICAN® carrier mounting.

Designed and rated to comply with ANSI Code B30.5.

LOAD HOISTING DATA*

Maximum Lifting Capacity - Lbs.	Min. Pts. of Line	Maximum Hoisting Distance	
		Main Drum - Rear	Aux. Drum - Front
400,000	11	173'	91'
371,420	10	191'	100'
334,270	9	212'	111'
297,130	8	239'	125'
259,990	7	273'	143'
222,850	6	318'	167'
185,710	5	382'	201'
148,560	4	478'	251'
111,420	3	637'	335'
74,280	2	956'	503'
37,140	1	1912'	1006'

*With 1-1/8 inch dia. rope on main drum and 1 inch dia. rope on aux. drum.

MAX. BOOM AND JIB ERECTION

77S Tubular Boom	No. 16HL Jib
240' Hammerhead	90' No. 16HL Jib
†240' Hammerhead	100' No. 16HL Jib
290' Tapered Tip	80' No. 16HL Jib
280' Tapered Tip	100' No. 16HL Jib
†290' Tapered Tip	90' No. 16HL Jib
†290' Tapered Tip	100' No. 16HL Jib

†With 10,000 lb. front bumper counterweight and boom erection assistor.

NOTE: In accordance with varying material situations and the Company's policy of constant product improvement these specifications subject to change without notice and without incurring responsibility to units previously sold.

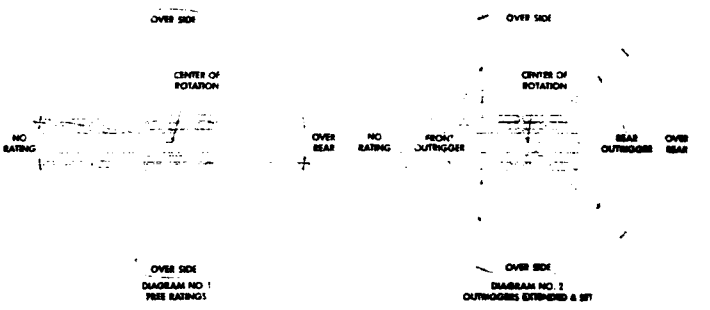

77S HAMMERHEAD BOOM COMPOSITION

Boom Length (In Feet)	30 Ft. 77S Inner	10 Ft. 77S Center	20 Ft. 77S Center	50 Ft. 77S Center	40 Ft. 77H Outer Base	Hammer-Head Tip
70'	1	–	–	–	1	1
80'	1	1	–	–	1	1
90'	1	–	1	–	1	1
100'	1	1	1	–	1	1
110'	1	–	2	–	1	1
120'	1	–	–	1	1	1
130'	1	1	–	1	1	1
140'	1	–	1	1	1	1
150'	1	1	1	1	1	1
160'	1	–	2	1	1	1
170'	1	–	–	2	1	1
180'	1	1	–	2	1	1
190'	1	–	1	2	1	1
200'	1	1	1	2	1	1
210'	1	–	2	2	1	1
220'	1	–	–	3	1	1
230'	1	1	–	3	1	1
240'	1	–	1	3	1	1

77S TAPERED TIP BOOM COMPOSITION

Boom Length (In Feet)	30 Ft. 77S Inner	10 Ft. 77S Center	20 Ft. 77S Center	50 Ft. 77S Center	40 Ft. 77H Outer Base	30 Ft. 77S Tapered Tip
100'	1	–	–	–	1	1
110'	1	1	–	–	1	1
120'	1	–	1	–	1	1
130'	1	1	1	–	1	1
140'	1	–	2	–	1	1
150'	1	–	–	1	1	1
160'	1	1	–	1	1	1
170'	1	–	1	1	1	1
180'	1	1	1	1	1	1
190'	1	–	2	1	1	1
200'	1	–	–	2	1	1
210'	1	1	–	2	1	1
220'	1	–	1	2	1	1
230'	1	1	1	2	1	1
240'	1	–	2	2	1	1
250'	1	–	–	3	1	1
260'	1	1	–	3	1	1
270'	1	–	1	3	1	1
280'	1	1	1	3	1	1
290'	1	–	2	3	1	1

MODEL 9520 WORKING RANGES

BOOM ANGLE DIAGRAM

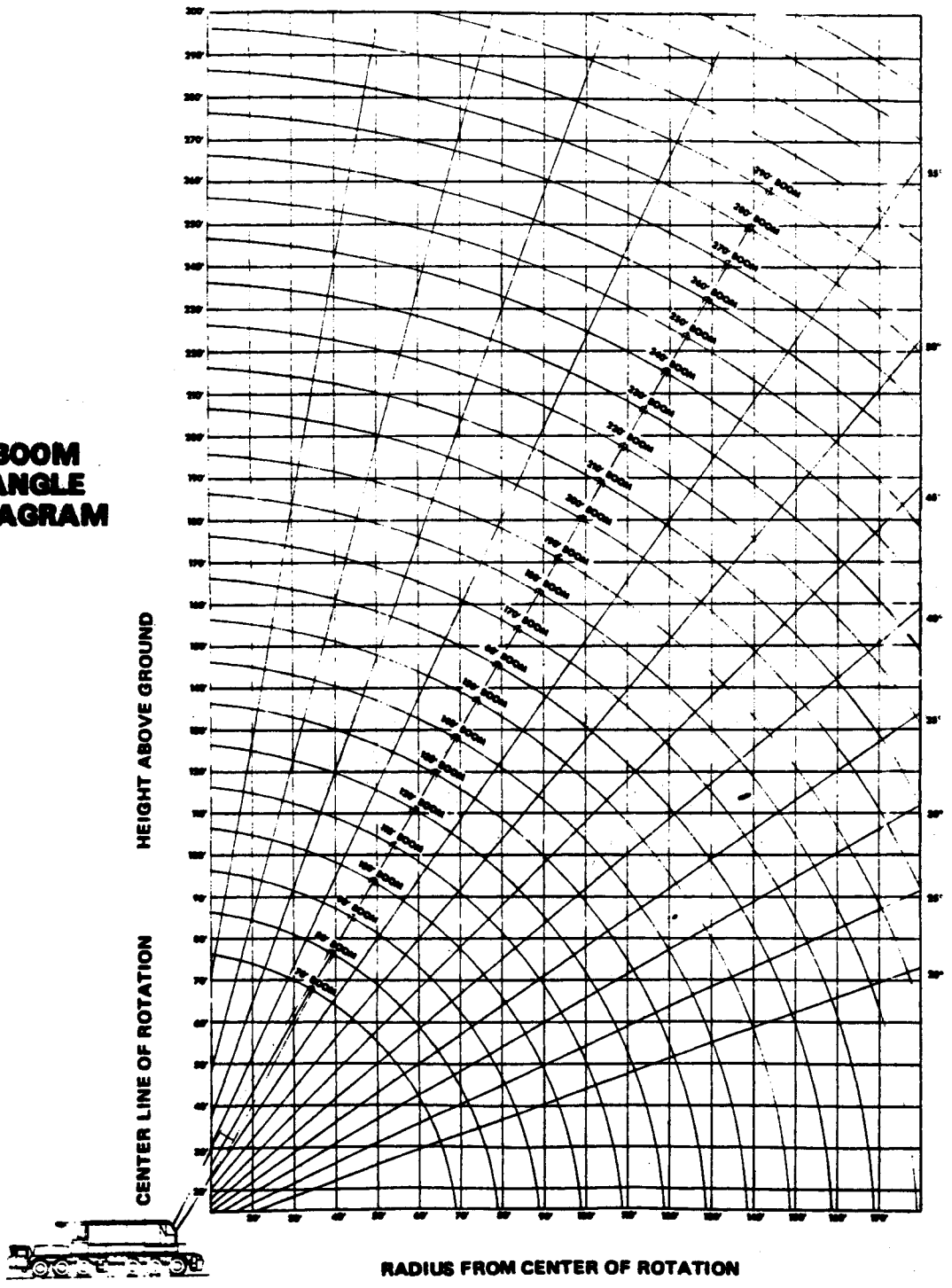

SOLD & SERVICED BY:

AMERICAN HOIST
& DERRICK COMPANY
ST. PAUL, MINNESOTA 55107

3M CPI 10-73 FORM NO. 9520-TR-2A PRINTED IN U.S.A.

ZIEGLER JIB RATINGS FOR MODEL 9526
TRUCK CRANE W/ 77ft TAPER TIP
BOOM & 75,000# CTWT

BOOM & JIB LENGTH	BOOM RADIUS (FEET)	5° JIB OFFSET		15° JIB OFFSET		25° JIB OFFSET	
		BOOM ANGLE	RATING (LBS)	BOOM ANGLE	RATING (LBS)	BOOM ANGLE	RATING (LBS)
40' JIB & 100' BOOM	31	80.9	32,000*				
	35	79.2	32,000*				
	40	77.1	32,000*	79.3	32,000*		
	50	72.9	32,000*	75.6	32,000*	78.1	29,700*
	60	68.6	32,000*	71.2	32,000*	73.7	26,800*
	70	64.1	32,000*	66.7	32,000*	69.1	24,500*
	80	59.5	32,000*	62.0	28,700*	64.4	22,600*
	90	54.5	30,500*	57.1	26,100*	59.3	21,000*
	100	49.3	27,600*	51.8	24,100*	53.9	19,800*
40' JIB & 110' BOOM	33	80.7	32,000*				
	35	79.9	32,000*				
	40	78.0	32,000*	80.5	32,000*		
	50	74.1	32,000*	76.6	32,000*	79.0	30,400*
	60	70.1	32,000*	72.6	32,000*	74.9	27,500*
	70	66.0	32,000*	68.4	32,000*	70.7	25,100*
	80	61.7	32,000*	64.1	29,900*	66.3	23,300*
	90	57.2	32,000*	59.[illegible]	27,300*	61.7	21,700*
	100	52.5	29,300*	54.9	25,200*	56.9	20,500*
	110	47.5	26,700*	49.8	23,500*	51.7	19,400*
40' JIB & 120' BOOM	34	80.9	32,000*				
	35	80.6	32,000*				
	40	78.7	32,000*				
	50	75.1	32,000*	77.5	32,000*	79.7	30,800*
	60	71.4	32,000*	73.7	32,000*	75.9	28,100*
	70	67.5	32,000*	69.9	32,000*	72.9	25,800*
	80	63.6	32,000*	65.9	31,100*	68.0	23,900*
	90	59.5	32,000*	61.8	28,500*	63.8	22,400*
	100	55.3	30,900*	57.5	26,300*	59.4	21,100*
	110	50.7	28,300*	52.9	24,500*	54.6	19,900*
	120	45.9	26,000*	48.0	23,000*	49.8	19,000*
40' JIB & 130' BOOM	36	80.8	32,000*				
	40	79.4	32,000*				
	50	76.0	32,000*	78.2	32,000*	80.3	32,000*
	60	72.5	32,000*	74.7	32,000*	76.8	28,700*
	70	68.9	32,000*	71.1	32,000*	73.1	26,300*
	80	65.3	32,000*	67.4	32,000*	69.4	24,600*
	90	61.5	32,000*	63.6	29,600*	65.5	23,000*
	100	57.6	32,000*	59.7	27,300*	61.5	21,600*
	110	53.5	29,800*	55.5	25,400*	57.3	20,500*
	120	49.1	27,400*	51.1	23,800*	52.8	19,500*
	130	44.4	25,500*	46.4	22,500*	48.0	18,700*
40' JIB & 140' BOOM	37	81.0	32,000*				
	40	80.0	32,000*				
	50	76.8	32,000*	78.9	32,000*	80.9	32,000*
	60	73.5	32,000*	75.6	32,000*	77.5	29,100*
	70	70.1	32,000*	72.2	32,000*	74.1	27,000*
	80	66.7	32,000*	68.8	32,000*	70.6	25,000*
	90	63.2	32,000*	65.2	30,600*	67.1	23,500*
	100	59.6	32,000*	61.6	28,300*	63.3	22,100*
	110	55.8	31,200*	57.8	26,300*	59.5	21,000*
	120	51.8	28,800*	53.8	24,700*	55.4	20,000*
	130	47.6	26,300	49.5	23,300*	51.1	19,100*
	140	43.1	23,700	44.9	22,100*	46.4	18,500*

BOOM & JIB LENGTH	BOOM RADIUS (FEET)	5° JIB OFFSET		15° JIB OFFSET		25° JIB OFFSET	
		BOOM ANGLE	RATING (LBS)	BOOM ANGLE	RATING (LBS)	BOOM ANGLE	RATING (LBS)
40' JIB & 150 BOOM	39	80 6	32 000*				
	40	80 5	32 000*				
	50	77 5	32 000*	79 5	32 000*		
	60	74 4	32,000*	76 4	32 000*	78 2	29 600
	70	71 2	32,000*	73 2	32 000*	75 0	27 400*
	80	68 0	32 000*	70 0	32 000*	71 7	25 600*
	90	64 7	32 000*	66 7	32 000*	68 4	24 000*
	100	61 3	32 000*	63 2	29 300*	64 9	22 700
	110	57 8	32 000*	59 7	27 200	61 4	21 500*
	120	54 2	20 000	56 0	25 500*	57 6	20 400*
	130	50 3	25,900	52 2	24 200*	53 7	19 600
	140	46 3	23,300	48 0	22 900*	49 5	18 800*
	150	41 9	21,100	43 6	21 100	45 0	18,200*
40 JIB & 160 BOOM	41	80 7	32,000*				
	50	78 1	32,000*	80 0	32 000*		
	60	75 2	32 000*	77 1	32 000*	78 8	30,100*
	70	72 2	32,000*	74 1	32,000*	75 8	27,900*
	80	69 2	32,000*	71 0	32 000*	72 7	26 100*
	90	66 1	32,000*	67 9	32 000*	69 6	24 400*
	100	62 9	32 000*	64 7	30,100*	66 3	23,100*
	110	59 6	32 000*	61 4	28,100*	63 0	22 000*
	120	56 2	28 600	58 0	26 400*	59 5	20 900*
	130	52 7	25 500	54 4	25 000*	55 9	20 100*
	140	49 0	22,800	50 7	22 800	52 1	19,300*
	150	45 0	20 600	46 7	20 600	48 0	18 600*
	160	40 8	18 700	42 4	18 700	43 6	18,100*
40 JIB & 170 BOOM	42	80 9	32 000*				
	50	78 7	32 000*	80 5	32 000*		
	60	75 9	32 000*	77 7	32,000*	79 4	30 400*
	70	73 1	32,000*	74 9	32 000*	76 5	28 300*
	80	70 2	32 000*	72 0	32 000*	73 6	26 500*
	90	67 3	32 000*	69 0	32 000*	70 6	24 900*
	100	64 3	32 000*	66 0	31 000*	67 6	23 600*
	110	61 2	32 000*	62 9	29 000*	64 4	22 400*
	120	58 0	28 100	59 7	27 300*	61 2	21 400*
	130	54 7	25,000	56 4	25,000	57 9	20,500*
	140	51 3	22,400	53 0	22 400	54 3	19,700*
	150	47 7	20 200	49 3	20,200	50 6	19 000*
	160	43 9	18 200	45 4	18 200	46 7	18 200
	170	39 7	16,500	41 3	16 500	42 4	16 600
40' JIB & 180' BOOM	44	80 8	32 000*				
	50	79 2	32 000*	80 9	32 000*		
	60	76 5	32 000*	78 3	32 000*	79 9	30 900*
	70	73 9	32,000*	75 6	32 000*	77 2	28,700*
	80	71 1	32 000*	72 8	32 000*	74 4	26 000*
	90	68 4	32,000*	70 0	32 000*	71 6	25 400*
	100	65 5	32 000*	67 2	32 000*	68 7	24 000*
	110	62 6	32 000*	64 3	29 800*	65 7	22 900*
	120	59 7	27,700	61 3	27 700	62 7	21,800*
	130	56 6	24 600	58 2	24 600	59 6	20 900*
	140	53 4	21,900	55 0	21 900	56 3	20,100*
	150	50 0	19,700	51 6	19 700	52 9	19,400*
	160	46 5	17,800	48 1	17 800	49 3	17,800
	170	42 8	16 100	44 3	16,100	45 5	16,100
	180	38 8	14,600	40 2	14 600	41 3	14,600

BOOM & JIB LENGTH	BOOM RADIUS (FEET)	5° JIB OFFSET		15° JIB OFFSET		25° JIB OFFSET	
		BOOM ANGLE	RATING (LBS)	BOOM ANGLE	RATING (LBS)	BOOM ANGLE	RATING (LBS)
40' JIB & 190' BOOM	45	80.9	32,000*				
	50	79.7	32,000*				
	60	77.1	32,000*	78.8	32,000*	80.3	32,000*
	70	74.6	32,000*	76.2	32,000*	77.7	29,100*
	80	72.0	32,000*	73.6	32,000*	75.1	27,300*
	90	69.3	32,000*	71.0	32,000*	72.4	25,600*
	100	66.7	32,000*	68.3	32,000*	69.7	24,400*
	110	63.9	31,000	65.5	30,700*	66.9	23,300*
	120	61.1	27,200	62.7	27,200	64.1	22,200*
	130	58.2	24,100	59.8	24,100	61.1	21,300*
	140	55.2	21,500	56.8	21,500	58.1	20,400*
	150	52.1	19,200	53.6	19,200	54.9	19,200
	160	48.9	17,300	50.4	17,300	51.6	17,300
	170	45.4	15,600	46.9	15,600	48.1	15,600
	180	41.8	14,100	43.2	14,100	44.3	14,100
	190	37.9	12,800	39.2	12,600	40.2	12,800
40' JIB & 200' BOOM	47	80.8	32,000*				
	50	80.1	32,000*				
	60	77.7	32,000*	79.3	32,000*	80.7	32,000*
	70	75.2	32,000*	76.8	32,000*	78.3	29,400*
	80	72.8	32,000*	74.3	32,000*	75.8	27,800*
	90	70.2	32,000*	71.8	32,000*	73.2	26,200*
	100	67.7	32,000*	69.2	32,000*	70.6	24,800*
	110	65.1	30,600	66.6	30,600	68.0	23,600*
	120	62.4	26,800	63.9	26,800	65.3	22,600*
	130	59.7	23,700	61.2	23,700	62.5	21,700*
	140	56.9	21,100	58.3	21,100	59.6	20,800*
	150	54.0	18,800	55.4	18,800	56.6	18,800
	160	50.9	16,900	52.4	16,900	53.6	16,900
	170	47.8	15,200	49.2	15,200	50.3	15,200
	180	44.4	13,700	45.8	13,700	46.9	13,700
	190	40.9	12,400	42.2	12,400	43.2	12,400
	200	37.0	11,200	38.3	11,200	39.3	11,200
40' JIB & 210' BOOM	48	81.0	32,000*				
	50	80.5	32,000*				
	60	78.2	32,000*	79.7	32,000*		
	70	75.8	32,000*	77.3	32,000*	78.8	29,800*
	80	73.5	32,000*	75.0	32,000*	76.4	28,000*
	90	71.1	32,000*	72.6	32,000*	73.9	26,600*
	100	68.6	32,000*	70.1	32,000*	71.4	25,300*
	110	66.1	30,100	67.6	30,100	68.9	24,100*
	120	63.6	26,400	65.1	26,400	66.4	23,000*
	130	61.0	23,200	62.5	23,200	63.7	22,100*
	140	58.4	20,600	59.8	20,600	61.0	20,600
	150	55.6	18,300	57.0	18,300	58.2	18,400
	160	52.8	16,400	54.2	16,400	55.3	16,400
	170	49.8	14,700	51.2	14,700	52.3	14,700
	180	46.7	13,200	48.1	13,200	49.2	13,200
	190	43.5	11,900	44.8	11,900	45.8	11,900
	200	40.0	10,700	41.3	10,700	42.2	10,700
	210	36.2	9,700	37.5	9,700	38.3	9,700
40' JIB & 220' BOOM	50	80.9	32,000*				
	60	78.6	32,000*	80.1	32,000*		
	70	76.4	32,000*	77.8	32,000*	79.2	30,100*
	80	74.1	32,000*	75.6	32,000*	76.9	28,400*

AMERICAN HOIST & DERRICK CO
ST PAUL MINNESOTA 55107

#15HL JIB RATINGS FOR MODEL
TRUCK CRANE W/ 7/8" TAPER TIP
BOOM & 75 000# CTWT

BOOM & JIB LENGTH	BOOM RADIUS (FEET)	5° JIB OFFSET		15° JIB OFFSET		25° JIB OFFSET	
		BOOM ANGLE	RATING (LBS)	BOOM ANGLE	RATING (LBS)	BOOM ANGLE	RATING (LBS)
40 JIB & 220 BOOM	90	71 8	32 000*	73 3	32 000	74 6	26 900*
	100	69 5	32 000*	70 9	32,000*	72 2	25 600*
	110	67 1	29 700	68 5	29 700	69 8	24 300*
	120	64 7	25 900	66 1	25 900	67 3	23 300
	130	62 2	22 800	63 6	22 800	64 8	22 400*
	140	59 7	20 100	61 1	20 100	62 3	20 200
	150	57 1	17 900	58 5	17 900	59 6	17,900
	160	54 4	15 900	55 8	15,900	56 9	16 000
	170	51 7	14 200	53 0	14 200	54 1	14 300
	180	48 8	12 800	50 1	12 800	51 2	12,800
	190	45 8	11 400	47 1	11,400	48 1	11,400
	200	42 6	10 300	43 8	10,300	44 8	10 300
	210	39.2	9,200	40 4	9,200	41 3	9,200
	220	35 5	8 300	36 7	8,300	37 5	8 300
40 JIB & 230' BOOM	51	81 0	32,000*				
	60	79 1	32 000*	80 5	32 000*		
	70	76 9	32 000*	79 3	32 000*	79 6	30 400*
	80	74 7	32,000*	76 1	32 000*	77 4	28 700*
	90	72 5	32,000*	73 9	32,000*	75 2	27 200*
	100	70 3	32 000*	71 6	32,000*	72 9	26 000*
	110	68 0	29 200	69 4	29 200	70 6	24 700*
	120	65 7	25,400	67 1	25 400	68 3	23 700*
	130	63 3	22 300	64 7	22 300	65 9	22,300
	140	60 9	19 700	62 3	19,700	63 4	19 700
	150	58 5	17,400	59 8	17 400	60 9	17 400
	160	55 9	15 500	57 3	15 500	58 4	15 500
	170	53 3	13 800	54 6	13 800	55 7	13 800
	180	50 6	12 300	51.9	12 300	52 9	12 300
	190	47 8	11 000	49 1	11 000	50 1	11 000
	200	44 9	9 800	46 1	9 800	47 1	9,800
	210	41 7	8 700	42 9	8 700	43 9	8 700
	220	38 4	7,800	39 6	7,800	40 4	7 800
	230	34 8	6 900	35 9	6 900	36 7	6 900
40' JIB & 240 BOOM	53	80 9	32 000*				
	60	79 5	32 000*	80 8	32 000*		
	70	77 4	32,000*	78 7	32 000*	80 0	29,900*
	80	75 3	32,000*	76 6	32,000*	77 9	28 900*
	90	73 2	32 000*	74 5	32 000*	75 7	27 500*
	100	71 0	32 000*	72 3	32 000*	73 5	26 300*
	110	68 8	28 800	70 1	28 800	71 3	25 000*
	120	66 6	25 000	67 9	25 000	69 1	24 000*
	130	64 4	21,800	65 7	21,900	66 8	21,900
	140	62 1	19 200	63 4	19 200	64 5	19,200
	150	59 7	16,900	61 0	17 000	62 1	17 000
	160	57 3	15 000	58 6	15,000	59 7	15 000
	170	54 8	13 300	56 1	13 300	57 2	13,300
	180	52 3	11 800	53 5	11 800	54 6	11 800
	190	49 7	10 500	50 9	10 500	51 9	10 500
	200	46 9	9 300	48 1	9 300	49 0	9 300
	210	44 0	8,200	45 2	8 200	46 1	8 300
	220	40 9	7,300	42 1	7,300	43 0	7,300
	230	37 7	6,400	38 8	6 400	39 6	6 500
	240	34 2	5 700	35 2	5 700	35 9	5,700

BOOM & JIB LENGTH	BOOM RADIUS (FEET)	5° JIB OFFSET		15° JIB OFFSET		25° JIB OFFSET	
		BOOM ANGLE	RATING (LBS.)	BOOM ANGLE	RATING (LBS.)	BOOM ANGLE	RATING (LBS.)
40' JIB & 250' BOOM	55	80.8	32,000*				
	60	79.8	32,000*				
	70	77.8	32,000*	79.1	32,000*	80.3	26,700*
	80	75.8	32,000*	77.1	30,600*	78.3	25,600*
	90	73.7	32,000*	75.0	29,200*	76.2	24,600*
	100	71.7	30,000*	73.0	27,900*	74.1	23,500*
	110	69.6	28,300	70.9	26,600*	72.0	22,500*
	120	67.5	24,600	68.7	24,600	69.9	21,400*
	130	65.3	21,400	66.6	21,400	67.7	20,400*
	140	63.1	18,800	64.4	18,800	65.5	18,800
	150	60.9	16,500	62.1	16,500	63.2	16,500
	160	58.6	14,600	59.8	14,600	60.9	14,600
	170	56.2	12,900	57.4	12,900	58.5	12,900
	180	53.8	11,400	55.0	11,400	56.0	11,400
	190	51.3	10,000	52.5	10,000	53.5	10,100
	200	48.7	8,800	49.9	8,900	50.8	8,900
	210	46.0	7,800	47.2	7,800	48.1	7,800
	220	43.2	6,800	44.3	6,800	45.2	6,900
	230	40.2	6,000	41.3	6,000	42.1	6,000
	240	37.0	5,200	38.1	5,200	38.8	5,200
	250	33.5	4,500	34.6	4,500	35.2	4,500
40' JIB & 260' BOOM	56	80.9	32,000*				
	60	80.2	32,000*				
	70	78.2	32,000*	79.5	28,600*	80.7	23,700*
	80	76.3	29,400*	77.5	27,100*	78.7	22,700*
	90	74.3	27,900*	75.6	25,800*	76.7	21,600*
	100	72.3	26,400*	73.6	24,500*	74.7	20,600*
	110	70.3	24,900*	71.5	23,300*	72.7	19,500*
	120	68.3	23,600*	69.5	22,100*	70.6	18,500*
	130	66.2	21,000	67.4	20,800*	68.5	17,500*
	140	64.1	18,300	65.3	18,300	66.4	16,600*
	150	61.9	16,000	63.1	16,000	64.2	15,700*
	160	59.7	14,100	60.9	14,100	62.0	14,100
	170	57.5	12,400	58.7	12,400	59.7	12,400
	180	55.2	10,900	56.4	10,900	57.4	10,900
	190	52.8	9,600	54.0	9,600	55.0	9,600
	200	50.4	8,400	51.5	8,400	52.5	8,400
	210	47.9	7,300	49.0	7,300	49.9	7,300
	220	45.2	6,400	46.3	6,400	47.2	6,400
	230	42.4	5,500	43.5	5,500	44.3	5,500
	240	39.5	4,700	40.5	4,700	41.3	4,700
	250	36.3	4,000	37.4	4,000	38.1	4,000
	260	32.9	3,400	33.9	3,400	34.6	3,400
40' JIB & 270' BOOM	58	80.9	29,900*				
	60	80.5	29,500*				
	70	78.6	27,800*	79.8	25,300*	81.0	21,000*
	80	76.7	26,100*	77.9	24,000*	79.1	20,000*
	90	74.8	24,500*	76.0	22,700*	77.2	18,900*
	100	72.9	23,100*	74.1	21,400*	75.2	17,900*
	110	71.0	21,700*	72.2	20,200*	73.2	16,800*
	120	69.0	20,500*	70.2	19,100*	71.3	15,900*
	130	67.0	19,200*	68.2	17,900*	69.2	14,900*
	140	65.0	17,800	66.2	16,900*	67.2	14,000*
	150	62.9	15,600	64.1	15,600	65.1	13,100*
	160	60.8	13,600	62.0	13,600	63.0	12,300*
	170	58.7	11,900	59.8	11,900	60.8	11,400*

BOOM & 75,000 CTWT

BOOM & JIB LENGTH	BOOM RADIUS (FEET)	5° JIB OFFSET		15° JIB OFFSET		25° JIB OFFSET	
		BOOM ANGLE	RATING (LBS.)	BOOM ANGLE	RATING (LBS.)	BOOM ANGLE	RATING (LBS.)
40' JIB & 270' BOOM	180	56.5	10,400	57.6	10,400	58.6	10,400
	190	54.2	9,100	55.4	9,100	56.3	9,100
	200	51.9	7,900	53.0	7,900	53.9	7,900
	210	49.5	6,800	50.6	6,800	51.5	6,800
	220	47.0	5,900	48.1	5,900	49.0	5,900
	230	44.4	5,000	45.5	5,000	46.3	5,000
	240	41.7	4,200	42.7	4,200	43.5	4,300
	250	38.8	3,500	39.8	3,500	40.6	3,500
	260	35.7	2,900	36.7	2,900	37.4	2,900
	270	32.4	2,300	33.3	2,300	33.9	2,300
40' JIB & 280' BOOM	59	81.0	26,500*				
	60	80.8	26,300*				
	70	79.0	24,600*	80.2	22,500*		
	80	77.1	22,900*	78.3	21,100*	79.4	17,500*
	90	75.3	21,400*	76.5	19,900*	77.6	16,500*
	100	73.4	20,000*	74.6	18,600*	75.7	15,400*
	110	71.6	18,700*	72.7	17,400*	73.8	14,400*
	120	69.7	17,500*	70.8	16,300*	71.9	13,400*
	130	67.8	16,300*	68.9	15,200*	69.9	12,500*
	140	65.8	15,200*	67.0	14,200*	68.0	11,600*
	150	63.8	14,200*	65.0	13,300*	66.0	10,700*
	160	61.8	13,100	62.9	12,400*	63.9	9,900*
	170	59.8	11,400	60.9	11,400	61.8	9,100*
	180	57.7	9,900	58.8	9,900	59.7	8,400*
	190	55.5	8,600	56.6	8,600	57.5	7,700*
	200	53.3	7,400	54.4	7,400	55.3	7,000*
	210	51.0	6,400	52.1	6,400	53.0	6,300*
	220	48.7	5,400	49.7	5,400	50.6	5,400
	230	46.2	4,500	47.3	4,500	48.1	4,500
	240	43.7	3,700	44.7	3,700	45.5	3,800
	250	41.0	3,000	42.0	3,000	42.8	3,000
	260	38.2	2,400	39.2	2,400	39.8	2,400
	270	35.1	1,800	36.1	1,800	36.7	1,800
	280	31.9	1,200	32.8	1,200	33.3	1,300
40' JIB & 290' BOOM	61	80.9	23,200*				
	70	79.3	21,700*	80.5	19,900*		
	80	77.5	20,100*	78.7	18,500*	79.8	15,300*
	90	75.8	18,600*	76.9	17,300*	78.0	14,200*
	100	74.0	17,300*	75.1	16,000*	76.1	13,100*
	110	72.2	16,000*	73.3	14,900*	74.3	12,100*
	120	70.3	14,800*	71.4	13,800*	72.5	11,200*
	130	68.5	13,700*	69.6	12,700*	70.6	10,300*
	140	66.6	12,600*	67.7	11,800*	68.7	9,400*
	150	64.7	11,700*	65.8	10,900*	66.8	8,600*
	160	62.7	10,700*	63.8	10,000*	64.8	7,800*
	170	60.8	9,900*	61.9	9,200*	62.8	7,000*
	180	58.8	9,000*	59.8	8,400*	60.8	6,300*
	190	56.7	8,100	57.8	7,600*	58.7	5,600*
	200	54.6	6,900	55.6	6,900*	56.5	4,900*
	210	52.4	5,900	53.5	5,900	54.3	4,300*
	220	50.2	4,900	51.2	4,900	52.1	3,700*
	230	47.9	4,100	48.9	4,100	49.7	3,100*
	240	45.5	3,300	46.5	3,300	47.3	2,500*
	250	43.0	2,500	44.0	2,500	44.7	1,900*

BOOM & JIB LENGTH	BOOM RADIUS (FEET)	5° JIB OFFSET		15° JIB OFFSET		25° JIB OFFSET	
		BOOM ANGLE	RATING (LBS)	BOOM ANGLE	RATING (LBS)	BOOM ANGLE	RATING (LBS)
40' JIB & 290' BOOM	260	40.3	1,900	41.3	1,900	42.0	1,300*
	270	37.6	1,300	38.5	1,300	39.2	800*
	280	34.6	700	35.5	700	36.1	200*
50' JIB & 130' BOOM	38	80.9	32,000*				
	40	80.3	32,000*				
	50	77.0	30,900*	79.7	28,400*		
	60	73.8	29,800*	76.4	27,600*	78.9	24,600*
	70	70.4	28,900*	73.0	26,800*	75.4	22,800*
	80	67.0	27,900*	69.6	26,200*	71.9	21,100*
	90	63.5	27,100*	66.0	25,400*	68.4	19,700*
	100	59.8	26,400*	62.4	23,500*	64.6	18,500*
	110	56.1	25,700*	58.6	21,800*	60.7	17,500*
	120	52.1	23,700*	54.5	20,400*	56.7	16,700*
	130	47.9	21,900*	50.3	19,200*	52.3	15,900*
50' JIB & 140' BOOM	40	80.8	32,000*				
	50	77.7	31,000*	80.2	28,500*		
	60	74.6	29,900*	77.1	27,600*	79.5	25,100*
	70	71.5	29,000*	74.0	27,000*	76.3	23,200*
	80	68.3	28,100*	70.7	26,300*	73.0	21,500*
	90	65.0	27,400*	67.4	25,800*	69.6	20,100*
	100	61.6	26,600*	64.0	24,300*	66.2	18,900*
	110	58.1	25,900*	60.5	22,600*	62.6	17,900*
	120	54.4	24,700*	56.8	21,100*	58.8	17,000*
	130	50.6	23,000*	52.9	19,900*	54.9	16,200*
	140	46.5	21,400*	48.8	18,800*	50.6	15,500*
50' JIB & 150' BOOM	41	81.0	32,000*				
	50	78.4	31,200*	80.7	28,500*		
	60	75.4	30,200*	77.8	27,600*	80.0	25,400*
	70	72.4	29,300*	74.8	27,000*	77.0	23,500*
	80	69.4	28,400*	71.7	26,400*	73.9	21,900*
	90	66.3	27,600*	68.6	25,800*	70.7	20,500*
	100	63.1	26,900*	65.4	25,000*	67.5	19,300*
	110	59.9	26,200*	62.1	23,300*	64.1	18,300*
	120	56.5	25,600*	58.7	21,800*	60.7	17,400*
	130	52.9	24,000*	55.1	20,500*	57.0	16,600*
	140	49.2	22,400*	51.4	19,500*	53.2	15,900*
	150	45.3	21,000*	47.4	18,500*	49.1	15,400*
50' JIB & 160' BOOM	43	80.8	31,900*				
	50	78.9	31,100*				
	60	76.1	30,300*	78.4	27,700*	80.5	25,800*
	70	73.3	29,400*	75.5	27,100*	77.6	23,900*
	80	70.4	28,600*	72.7	26,600*	74.7	22,300*
	90	67.5	27,800*	69.7	25,900*	71.7	20,900*
	100	64.5	27,100*	66.7	25,500*	68.7	19,700*
	110	61.4	26,400*	63.6	24,000*	65.5	18,700*
	120	58.3	25,900*	60.4	22,500*	62.3	17,800*
	130	55.0	25,000*	57.1	21,200*	58.9	17,000*
	140	51.5	23,000	53.6	20,000*	55.4	16,300*
	150	47.9	20,800	50.0	19,000*	51.7	15,700*
	160	44.1	18,800	46.1	18,200*	47.7	15,200*

AMERICAN HOIST & DERRICK CO
ST. PAUL, MINNESOTA 55107

#1611 JIB RATINGS FOR [illegible]
TRUCK CRANE WITH TAILSWING
BOOM & 75,000 CTWT

BOOM & JIB LENGTH	BOOM RADIUS (FEET)	5° JIB OFFSET		15° JIB OFFSET		25° JIB OFFSET	
		BOOM ANGLE	RATING (LBS)	BOOM ANGLE	RATING (LBS)	BOOM ANGLE	RATING (LBS)
50' JIB & 170' BOOM	45	80.7	31,700*				
	50	79.4	31,200*				
	60	76.8	30,300*	78.9	27,700*	81.0	25,700*
	70	74.1	29,500*	76.2	27,200*	78.2	24,200*
	80	71.4	28,800*	73.5	26,600*	75.5	22,600*
	90	68.6	28,000*	70.7	26,100*	72.6	21,200*
	100	65.8	27,300*	67.6	25,600*	69.7	20,100*
	110	62.9	26,600*	64.9	24,600*	66.8	19,000*
	120	59.9	26,100*	61.9	23,100*	63.7	18,100*
	130	56.8	25,200	58.8	21,800*	60.6	17,400*
	140	53.6	22,600	55.6	20,700*	57.3	16,600*
	150	50.3	20,300	52.2	19,600*	53.9	16,000*
	160	46.8	18,400	48.7	18,400	50.3	15,500*
	170	43.0	16,700	44.9	16,700	46.4	15,000*
50' JIB & 180' BOOM	46	80.9	31,500*				
	50	79.9	31,300*				
	60	77.4	30,400*	79.4	27,800*		
	70	74.8	29,600*	76.8	27,200*	78.8	24,500*
	80	72.2	28,900*	74.2	26,600*	76.1	23,000*
	90	69.6	28,100*	71.6	26,100*	73.4	21,600*
	100	66.9	27,500*	68.9	25,700*	70.7	20,400*
	110	64.1	26,900*	66.1	25,200*	67.9	19,400*
	120	61.3	26,300*	63.3	23,800*	65.0	18,500*
	130	58.4	24,700	60.4	22,400*	62.1	17,600*
	140	55.4	22,100	57.4	21,200*	59.0	16,900*
	150	52.3	19,900	54.2	19,900	55.8	16,300*
	160	49.1	17,900	51.0	17,900	52.5	15,800*
	170	45.7	16,200	47.5	16,200	49.0	15,300*
	180	42.0	14,800	43.8	14,800	45.2	14,800
50' JIB & 190' BOOM	48	80.8	31,300*				
	50	80.3	31,100*				
	60	77.9	30,400*	79.9	27,700*		
	70	75.4	29,600*	77.4	27,200*	79.3	24,700*
	80	73.0	28,900*	74.9	26,700*	76.7	23,200*
	90	70.4	28,200*	72.4	26,200*	74.2	21,900*
	100	67.9	27,600*	69.8	25,800*	71.6	20,700*
	110	65.3	27,000*	67.2	25,300*	68.9	19,700*
	120	62.6	26,500*	64.5	24,400*	66.2	18,800*
	130	59.9	24,300	61.8	22,900*	63.4	17,900*
	140	57.1	21,700	58.9	21,700	60.5	17,300*
	150	54.2	19,400	56.0	19,400	57.6	16,600*
	160	51.1	17,500	52.9	17,500	54.5	16,000*
	170	48.0	15,800	49.7	15,800	51.2	15,600*
	180	44.6	14,300	46.4	14,300	47.8	14,300
	190	41.1	13,000	42.8	13,000	44.1	13,000
50' JIB & 200' BOOM	49	80.9	31,100*				
	50	80.7	31,100*				
	60	78.4	30,400*	80.3	27,600*		
	70	76.0	29,600*	77.9	27,100*	79.7	25,000*
	80	73.7	29,000*	75.5	26,600*	77.3	23,500*
	90	71.3	28,300*	73.1	26,200*	74.9	22,200*
	100	68.8	27,700*	70.7	25,700*	72.4	21,100*
	110	66.3	27,100*	68.2	25,400*	69.8	20,000*
	120	63.8	26,500*	65.6	24,900*	67.3	19,100*
	130	61.2	23,900	63.0	23,500*	64.6	18,300*

AMERICAN HOIST & DERRICK CO
ST PAUL, MINNESOTA 55107

#16HL JIB RATINGS FOR MODEL 9520
TRUCK CRANE W/7ft TAPER TIP
BOOM & 75,000# CTWT

BOOM & JIB LENGTH	BOOM RADIUS (FEET)	5° JIB OFFSET		15° JIB OFFSET		25° JIB OFFSET	
		BOOM ANGLE	RATING (LBS.)	BOOM ANGLE	RATING (LBS.)	BOOM ANGLE	RATING (LBS.)
50' JIB & 200' BOOM	140	58.6	21,200	60.3	21,200	61.9	17,500*
	150	55.8	19,000	57.6	19,000	59.1	16,900*
	160	53.0	17,000	54.7	17,100	56.2	16,300*
	170	50.0	15,300	51.7	15,400	53.2	15,400
	180	46.9	13,900	48.6	13,900	50.0	13,900
	190	43.7	12,600	45.3	12,600	46.6	12,600
	200	40.2	11,400	41.8	11,400	43.0	11,400
50' JIB & 210' BOOM	51	80.9	30,900*				
	60	78.8	30,200*	80.7	27,500*		
	70	76.6	29,600*	78.4	27,100*	80.1	24,900*
	80	74.3	28,900*	76.1	26,600*	77.8	23,800*
	90	72.0	28,300*	73.8	26,200*	75.5	22,400*
	100	69.7	27,700*	71.5	25,800*	73.1	21,300*
	110	67.3	27,100*	69.1	25,400*	70.7	20,300*
	120	64.9	26,500	66.6	24,900*	68.2	19,400*
	130	62.4	23,400	64.2	23,400	65.7	18,500*
	140	59.9	20,800	61.6	20,800	63.1	17,800*
	150	57.3	18,500	59.0	18,500	60.5	17,200*
	160	54.6	16,600	56.3	16,600	57.8	16,600
	170	51.9	14,900	53.5	14,900	54.9	14,900
	180	49.0	13,400	50.6	13,400	52.0	13,400
	190	46.0	12,100	47.6	12,100	48.9	12,100
	200	42.8	10,900	44.4	10,900	45.6	10,900
	210	39.4	9,900	40.9	9,900	42.1	9,900
50' JIB & 220' BOOM	52	81.0	30,600*				
	60	79.2	30,000*				
	70	77.1	29,500*	78.8	26,900*	80.5	24,700*
	80	74.9	28,900*	76.6	26,600*	78.3	24,000*
	90	72.7	28,300*	74.4	26,100*	76.0	22,800*
	100	70.5	27,700*	72.2	25,600*	73.8	21,600*
	110	68.2	27,200*	69.9	25,300*	71.5	20,600*
	120	65.9	26,100	67.6	25,000*	69.1	19,700*
	130	63.5	23,000	65.2	23,000	66.7	18,900*
	140	61.1	20,300	62.8	20,300	64.3	18,100*
	150	58.7	18,100	60.3	18,100	61.8	17,500*
	160	56.1	16,100	57.8	16,100	59.2	16,100
	170	53.5	14,400	55.1	14,400	56.5	14,400
	180	50.8	12,900	52.4	12,900	53.7	13,000
	190	48.0	11,600	49.6	11,600	50.9	11,600
	200	45.0	10,400	46.6	10,400	47.8	10,500
	210	41.9	9,400	43.4	9,400	44.6	9,400
	220	38.6	8,400	40.1	8,400	41.2	8,500
50' JIB & 230' BOOM	54	80.9	30,200*				
	60	79.6	29,900*				
	70	77.6	29,300*	79.3	26,700*	80.8	24,500*
	80	75.5	28,700*	77.1	26,400*	78.7	24,300*
	90	73.3	28,100*	75.0	25,900*	76.6	23,000*
	100	71.2	27,600*	72.8	25,600*	74.4	21,900*
	110	69.0	27,100	70.7	25,100*	72.2	20,800*
	120	66.8	25,600	68.4	24,800*	69.9	19,900*
	130	64.5	22,500	66.2	22,500	67.6	19,100*
	140	62.2	19,900	63.9	19,900	65.3	18,400*
	150	59.9	17,600	61.5	17,600	62.9	17,600
	160	57.5	15,700	59.1	15,700	60.5	15,700
	170	55.0	13,900	56.6	14,000	57.9	14,000

BOOM & JIB LENGTH	BOOM RADIUS (FEET)	5° JIB OFFSET		15° JIB OFFSET		25° JIB OFFSET	
		BOOM ANGLE	RATING (LBS)	BOOM ANGLE	RATING (LBS)	BOOM ANGLE	RATING (LBS)
50' JIB & 230' BOOM	180	52.5	12,500	54.0	12,500	55.3	12,500
	190	49.8	11,100	51.4	11,100	52.6	11,200
	200	47.1	10,000	48.6	10,000	49.8	10,000
	210	44.2	8,900	45.7	8,900	46.8	8,900
	220	41.1	7,900	42.6	8,000	43.7	8,000
	230	37.9	7,100	39.3	7,100	40.3	7,100
50' JIB & 240' BOOM	55	81.0	29,800*				
	60	80.0	29,600*				
	70	78.0	29,000*	79.6	26,400*		
	80	76.0	28,500*	77.6	26,100*	79.1	23,900*
	90	73.9	27,900*	75.5	25,700*	77.0	23,200*
	100	71.9	27,400*	73.5	25,300*	74.9	22,100*
	110	69.8	26,900*	71.4	25,000*	72.8	21,100*
	120	67.6	25,200	69.2	24,500*	70.7	20,100*
	130	65.5	22,000	67.1	22,000	68.5	19,400*
	140	63.3	19,400	64.9	19,400	66.2	18,600*
	150	61.0	17,100	62.6	17,100	64.0	17,200
	160	58.8	15,200	60.3	15,200	61.6	15,200
	170	56.4	13,500	57.9	13,500	59.2	13,500
	180	54.0	12,000	55.5	12,000	56.8	12,000
	190	51.5	10,700	53.0	10,700	54.2	10,700
	200	48.9	9,500	50.4	9,500	51.6	9,500
	210	46.2	8,400	47.6	8,400	48.8	8,400
	220	43.4	7,500	44.8	7,500	45.9	7,500
	230	40.4	6,600	41.8	6,600	42.8	6,600
	240	37.2	5,800	38.5	5,800	39.5	5,900
50' JIB & 250' BOOM	57	80.9	29,300*				
	60	80.3	29,100*				
	70	78.4	28,600*	80.0	26,100*		
	80	76.4	28,100*	78.0	25,700*	79.5	23,400*
	90	74.5	27,500*	76.0	25,400*	77.5	23,100*
	100	72.5	27,000*	74.0	25,000*	75.5	22,200*
	110	70.5	26,500*	72.0	24,700*	73.4	21,300*
	120	68.4	24,700	70.0	24,200*	71.4	20,400*
	130	66.4	21,600	67.9	21,600	69.3	19,500*
	140	64.2	19,000	65.8	19,000	67.1	18,600*
	150	62.1	16,700	63.6	16,700	64.9	16,700
	160	59.9	14,700	61.4	14,800	62.7	14,800
	170	57.7	13,000	59.2	13,100	60.4	13,100
	180	55.4	11,500	56.8	11,500	58.1	11,600
	190	53.0	10,200	54.5	10,200	55.7	10,200
	200	50.6	9,000	52.0	9,000	53.2	9,000
	210	48.0	8,000	49.4	8,000	50.6	8,000
	220	45.4	7,000	46.8	7,000	47.9	7,000
	230	42.6	6,200	44.0	6,200	45.0	6,200
	240	39.6	5,400	41.0	5,400	42.0	5,400
	250	36.5	4,700	37.8	4,700	38.7	4,700
50' JIB & 260' BOOM	59	80.8	28,600*				
	60	80.6	28,600*				
	70	78.8	28,000*	80.3	25,500*		
	80	76.9	27,500*	78.4	25,200*	79.8	21,400*
	90	75.0	26,900*	76.5	24,700*	77.9	20,400*
	100	73.1	25,600*	74.6	23,500*	76.0	19,500*
	110	71.1	24,200*	72.6	22,300*	74.0	18,600*
	120	69.2	23,000*	70.6	21,300*	72.0	17,700*
	130	67.2	21,100	68.6	20,200*	70.0	16,800*

BOOM & JIB LENGTH	BOOM RADIUS (FEET)	5° JIB OFFSET		15° JIB OFFSET		25° JIB OFFSET	
		BOOM ANGLE	RATING (LBS)	BOOM ANGLE	RATING (LBS)	BOOM ANGLE	RATING (LBS)
50' JIB & 260' BOOM	140	65.1	18,500	66.6	18,500	67.9	15,900*
	150	63.1	16,200	64.5	16,200	65.8	15,100*
	160	61.0	14,300	62.4	14,300	63.7	14,200*
	170	58.8	12,600	60.3	12,600	61.5	12,600
	180	56.6	11,100	58.1	11,100	59.3	11,100
	190	54.4	9,700	55.8	9,800	57.0	9,800
	200	52.1	8,600	53.5	8,600	54.6	8,600
	210	49.7	7,500	51.0	7,500	52.2	7,500
	220	47.2	6,500	48.5	6,500	49.6	6,600
	230	44.6	5,700	45.9	5,700	47.0	5,700
	240	41.9	4,900	43.2	4,900	44.2	4,900
	250	39.0	4,200	40.3	4,200	41.2	4,200
	260	35.9	3,500	37.1	3,500	38.0	3,600
50' JIB & 270' BOOM	60	80.9	27,800*				
	70	79.1	26,900*	80.6	24,200*		
	80	77.3	25,300*	78.8	23,000*	80.2	18,800*
	90	75.5	23,800*	76.9	21,800*	78.3	17,900*
	100	73.6	22,400*	75.1	20,600*	76.4	17,000*
	110	71.7	21,100*	73.2	19,400*	74.5	16,100*
	120	69.8	19,900*	71.3	18,300*	72.6	15,200*
	130	67.9	18,700*	69.4	17,400*	70.7	14,300*
	140	65.0	17,600*	67.4	16,400*	68.7	13,500*
	150	64.0	15,800	65.4	15,400*	66.7	12,600*
	160	62.0	13,800	63.4	13,800	64.6	11,900*
	170	59.9	12,100	61.3	12,100	62.5	11,100*
	180	57.8	10,600	59.2	10,600	60.4	10,400*
	190	55.7	9,300	57.0	9,300	58.2	9,300
	200	53.5	8,100	54.8	8,100	56.0	8,100
	210	51.2	7,000	52.5	7,000	53.6	7,000
	220	48.8	6,100	50.2	6,100	51.2	6,100
	230	46.4	5,200	47.7	5,200	48.7	5,200
	240	43.8	4,400	45.1	4,400	46.1	4,400
	250	41.2	3,700	42.4	3,700	43.4	3,700
	260	38.3	3,000	39.6	3,100	40.5	3,100
	270	35.3	2,500	36.5	2,500	37.3	2,500
50' JIB & 280' BOOM	62	80.9	25,200*				
	70	79.5	23,800*	80.9	21,500*		
	80	77.7	22,300*	79.1	20,300*	80.5	16,600*
	90	75.9	20,900*	77.3	19,100*	78.7	15,700*
	100	74.1	19,500*	75.5	18,000*	76.9	14,700*
	110	72.3	18,200*	73.7	16,800*	75.0	13,800*
	120	70.5	17,000*	71.9	15,800*	73.2	12,900*
	130	68.6	15,900*	70.0	14,800*	71.3	12,000*
	140	66.7	14,800*	68.1	13,800*	69.4	11,200*
	150	64.8	13,900*	66.2	12,900*	67.4	10,400*
	160	62.9	12,900*	64.3	12,900*	65.5	9,700*
	170	60.9	11,600	62.3	11,200*	63.5	8,900*
	180	58.9	10,100	60.3	10,100	61.4	8,200*
	190	56.8	8,800	58.2	8,800	59.3	7,500*
	200	54.7	7,600	56.1	7,600	57.2	6,900*
	210	52.6	6,500	53.9	6,500	55.0	6,200*
	220	50.3	5,600	51.6	5,600	52.7	5,600
	230	48.0	4,700	49.3	4,700	50.3	4,700
	240	45.6	3,900	46.9	3,900	47.9	3,900
	250	43.1	3,200	44.4	3,200	45.3	3,200

AMERICAN HOIST & DERRICK CO
ST. PAUL, MINNESOTA 55107

TRUCK CRANE W/7/11 TAPER TIP
BOOM & 75,000# C.W.T.

BOOM & JIB LENGTH	BOOM RADIUS (FEET)	5° JIB OFFSET		15° JIB OFFSET		25° JIB OFFSET	
		BOOM ANGLE	RATING (LBS.)	BOOM ANGLE	RATING (LBS.)	BOOM ANGLE	RATING (LBS.)
50' JIB & 280' BOOM	260	40.5	2,600	41.7	2,600	42.6	2,600
	270	37.7	2,000	38.9	2,000	39.7	2,000
	280	34.7	1,400	35.9	1,400	36.7	1,400
50' JIB & 290' BOOM	63	81.0	22,200*				
	70	79.8	21,100*				
	80	76.1	19,500*	79.5	17,900*	80.8	14,500*
	90	76.3	18,100*	77.7	16,600*	79.0	13,600*
	100	74.6	16,800*	76.0	15,500*	77.3	12,600*
	110	72.8	15,600*	74.2	14,400*	75.5	11,700*
	120	71.1	14,400*	72.4	13,400*	73.7	10,800*
	130	69.3	13,300*	70.6	12,400*	71.9	10,000*
	140	67.5	12,400*	68.8	11,500*	70.0	9,100*
	150	65.6	11,400*	67.0	10,600*	68.2	8,400*
	160	63.8	10,500*	65.1	9,800*	66.3	7,600*
	170	61.9	9,700*	63.2	9,000*	64.3	6,900*
	180	59.9	8,900*	61.2	8,200*	62.4	6,200*
	190	57.9	8,100*	59.3	7,500*	60.4	5,600*
	200	55.9	7,100	57.2	6,800*	58.3	4,900*
	210	53.9	6,100	55.1	6,100	56.2	4,300*
	220	51.7	5,100	53.0	5,100	54.1	3,700*
	230	49.5	4,200	50.8	4,200	51.8	3,200*
	240	47.3	3,400	48.5	3,500	49.5	2,600*
	250	44.9	2,700	46.1	2,700	47.1	2,100*
	260	42.4	2,100	43.6	2,100	44.6	1,500*
	270	39.9	1,500	41.0	1,500	41.9	1,000*
	280	37.1	900	38.3	900	39.1	500*
60' JIB & 150' BOOM	44	80.6	28,700*				
	50	79.2	28,100*				
	60	76.4	27,100*	79.1	24,700*		
	70	73.5	26,300*	75.2	24,200*	78.8	20,800*
	80	70.7	25,500*	73.4	23,500*	75.9	19,300*
	90	67.7	24,700*	70.4	22,900*	72.9	18,100*
	100	64.7	23,900*	67.4	22,000*	69.8	17,000*
	110	61.7	23,300*	64.3	20,500*	66.7	16,100*
	120	58.5	22,700*	61.1	19,200*	63.4	15,200*
	130	55.2	21,000*	57.8	18,000*	60.0	14,500*
	140	51.8	19,600*	54.3	17,000*	56.5	13,900*
	150	48.2	18,300*	50.6	16,200*	52.7	13,400*
60' JIB & 160' BOOM	45	81.0	28,600*				
	50	79.6	28,200*				
	60	77.0	27,200*	79.6	24,800*		
	70	74.3	26,400*	76.9	24,200*	79.3	21,000*
	80	71.6	25,600*	74.1	23,600*	76.5	19,600*
	90	68.8	24,900*	71.4	23,100*	73.7	18,400*
	100	66.0	24,200*	68.5	22,500*	70.8	17,300*
	110	63.1	23,500*	65.6	21,000*	67.9	16,400*
	120	60.1	23,000*	62.6	19,700*	64.8	15,500*
	130	57.0	21,900*	59.5	18,500*	61.6	14,900*
	140	53.8	20,400*	56.3	17,500*	58.4	14,200*
	150	50.5	19,100*	52.9	16,600*	54.9	13,600*
	160	47.0	17,900*	49.3	15,900*	51.3	13,200*
60' JIB & 170' BOOM	47	80.9	28,500*				
	50	80.1	28,200*				
	60	77.6	27,400*	80.1	24,800*		
	70	75.0	26,600*	77.5	24,300*	79.8	21,300*

AMERICAN HOIST & DERRICK CO
ST PAUL MINNESOTA 55107

#16HL JIB RATINGS FOR MODEL 5[illegible]
TRUCK CRANE W/7/11 TAPER TIP
BOOM & 75,000# CTWT

BOOM & JIB LENGTH	BOOM RADIUS (FEET)	5° JIB OFFSET		15° JIB OFFSET		25° JIB OFFSET	
		BOOM ANGLE	RATING (LBS.)	BOOM ANGLE	RATING (LBS.)	BOOM ANGLE	RATING (LBS.)
60' JIB & 170' BOOM	80	72.4	25,800*	74.9	23,700*	77.2	19,900*
	90	69.8	25,000*	72.2	23,100*	74.5	18,700*
	100	67.1	24,300*	69.5	22,600*	71.7	17,600*
	110	64.3	23,700*	66.7	21,600*	68.9	16,600*
	120	61.5	23,100*	63.9	20,200*	66.1	15,800*
	130	58.6	22,600*	61.0	19,000*	63.1	15,100*
	140	55.6	21,200*	58.0	18,000*	60.0	14,500*
	150	52.5	19,800*	54.9	17,100*	56.8	13,900*
	160	49.3	18,600	51.6	16,300*	53.5	13,400*
	170	45.9	16,900	48.1	15,600*	49.9	13,000*
60' JIB & 180' BOOM	49	80.8	28,300*				
	50	80.5	28,200*				
	60	78.1	27,400*	80.5	24,800*		
	70	75.6	26,600*	78.0	24,300*	80.3	21,500*
	80	73.2	25,800*	75.5	23,700*	77.7	20,100*
	90	70.7	25,100*	73.0	23,200*	75.2	18,900*
	100	68.1	24,500*	70.4	22,800*	72.6	17,900*
	110	65.5	23,900*	67.8	22,100*	69.9	17,000*
	120	62.8	23,400*	65.1	20,700*	67.2	16,100*
	130	60.1	22,600*	62.4	19,500*	64.4	15,400*
	140	57.3	21,900*	59.5	18,500*	61.5	14,700*
	150	54.4	20,000	56.6	17,600*	58.5	14,100*
	160	51.3	18,100	53.5	16,700*	55.4	13,600*
	170	48.2	16,400	50.3	16,000*	52.1	13,200*
	180	44.8	14,900	47.0	14,900	48.7	12,600*
60' JIB & 190' BOOM	50	80.9	28,100*				
	60	78.6	27,400*	80.9	24,700*		
	70	76.2	26,600*	78.5	24,200*	80.7	21,700*
	80	73.9	26,000*	76.1	23,700*	78.2	20,400*
	90	71.5	25,300*	73.7	23,200*	75.8	19,200*
	100	69.0	24,700*	71.3	22,700*	73.3	18,100*
	110	66.5	24,000*	68.8	22,400*	70.8	17,200*
	120	64.0	23,500*	66.2	21,200*	68.2	16,300*
	130	61.4	22,900*	63.6	20,000*	65.5	15,700*
	140	58.7	21,800	60.9	18,900*	62.8	15,000*
	150	56.0	19,600	58.1	18,000*	60.0	14,400*
	160	53.2	17,600	55.3	17,200*	57.1	13,900*
	170	50.2	15,900	52.3	16,000	54.1	13,400*
	180	47.1	14,500	49.2	14,500	50.9	13,000*
	190	43.9	13,100	45.9	13,100	47.5	12,700*
60' JIB & 200' BOOM	52	80.8	27,900*				
	60	79.0	27,400*				
	70	76.8	26,700*	79.0	24,200*		
	80	74.5	26,000*	76.7	23,700*	78.7	20,500*
	90	72.2	25,400*	74.4	23,200*	76.4	19,400*
	100	69.9	24,800*	72.0	22,800*	74.0	18,300*
	110	67.5	24,200*	69.6	22,400*	71.6	17,400*
	120	65.1	23,700*	67.2	21,800*	69.1	16,600*
	130	62.6	23,100*	64.7	20,500*	66.6	15,900*
	140	60.1	21,400	62.2	19,400*	64.0	15,200*
	150	57.5	19,200	59.6	18,400*	61.4	14,600*
	160	54.8	17,200	56.9	17,200	58.6	14,100*
	170	52.0	15,500	54.1	15,500	55.8	13,700*
	180	49.2	14,000	51.2	14,000	52.8	13,200*
	190	46.1	12,700	48.1	12,700	49.7	12,700
	200	43.0	11,500	44.9	11,500	46.4	11,600

SL-[illegible] 10520 (1)

BOOM & JIB LENGTH	BOOM RADIUS (FEET)	5° JIB OFFSET		15° JIB OFFSET		25° JIB OFFSET	
		BOOM ANGLE	RATING (LBS.)	BOOM ANGLE	RATING (LBS.)	BOOM ANGLE	RATING (LBS.)
60' JIB & 210' BOOM	53	80.9	27,800*				
	60	79.4	27,300*				
	70	77.3	26,600*	79.4	24,100*		
	80	75.1	26,000*	77.2	23,700*	79.2	20,800*
	90	72.9	25,400*	75.0	23,300*	76.9	19,600*
	100	70.6	24,800*	72.7	22,800*	74.6	18,600*
	110	68.4	24,300*	70.4	22,400*	72.3	17,600*
	120	66.1	23,700*	68.1	22,000*	70.0	16,800*
	130	63.7	23,200*	65.7	20,900*	67.6	16,100*
	140	61.3	21,000	63.3	19,800*	65.1	15,500*
	150	58.8	18,700	60.8	18,700	62.6	14,900*
	160	56.3	16,700	58.3	16,800	60.0	14,300*
	170	53.7	15,100	55.7	15,100	57.3	13,800*
	180	51.0	13,600	52.9	13,600	54.6	13,500*
	190	48.2	12,200	50.1	12,300	51.7	12,300
	200	45.2	11,100	47.1	11,100	48.6	11,100
	210	42.1	10,000	43.9	10,000	45.4	10,000
60' JIB & 220 BOOM	55	80.8	27,500*				
	60	79.8	27,100*				
	70	77.7	26,600*	79.8	24,000*		
	80	75.6	26,000*	77.7	23,600*	79.6	21,000*
	90	73.5	25,300*	75.5	23,300*	77.4	19,800*
	100	71.4	24,800*	73.4	22,800*	75.2	18,800*
	110	69.2	24,300*	71.2	22,400*	73.0	17,900*
	120	67.0	23,800*	68.9	22,100*	70.8	17,100*
	130	64.7	23,100	66.7	21,300*	68.5	16,300*
	140	62.4	20,500	64.4	20,200*	66.1	15,700*
	150	60.1	18,200	62.0	18,200	63.7	15,100*
	160	57.7	16,300	59.6	16,300	61.3	14,600*
	170	55.2	14,600	57.1	14,600	58.7	14,100*
	180	52.6	13,100	54.5	13,100	56.1	13,100
	190	50.0	11,800	51.9	11,800	53.4	11,800
	200	47.2	10,600	49.1	10,600	50.6	10,600
	210	44.3	9,500	46.1	9,600	47.6	9,600
	220	41.3	8,600	43.1	8,600	44.4	8,600
60' JIB & 230' BOOM	56	81.0	27,200*				
	60	80.2	27,000*				
	70	78.2	26,500*	80.1	23,900*		
	80	76.1	25,800*	78.1	23,500*	79.9	21,100*
	90	74.1	25,400*	76.0	23,100*	77.9	20,000*
	100	72.0	24,700*	74.0	22,700*	75.8	19,000*
	110	69.9	24,200*	71.9	22,400*	73.6	18,100*
	120	67.8	23,800*	69.7	22,000*	71.5	17,300*
	130	65.6	22,700	67.6	21,700*	69.3	16,500*
	140	63.5	20,000	65.3	20,000	67.0	15,900*
	150	61.2	17,800	63.1	17,800	64.8	15,300*
	160	58.9	15,800	60.8	15,800	62.4	14,700*
	170	56.6	14,100	58.4	14,100	60.0	14,100
	180	54.1	12,600	56.0	12,600	57.5	12,600
	190	51.7	11,300	53.5	11,300	55.0	11,300
	200	49.1	10,100	50.8	10,100	52.3	10,200
	210	46.4	9,100	48.1	9,100	49.5	9,100
	220	43.5	8,100	45.3	8,100	46.6	8,100
	230	40.5	7,300	42.2	7,300	43.5	7,300

BOOM & JIB LENGTH	BOOM RADIUS (FEET)	5° JIB OFFSET		15° JIB OFFSET		25° JIB OFFSET	
		BOOM ANGLE	RATING (LBS)	BOOM ANGLE	RATING (LBS)	BOOM ANGLE	RATING (LBS)
60' JIB & 240' BOOM	58	80.9	26,800*				
	60	80.5	26,600*				
	70	78.6	26,200*	80.5	23,600*		
	80	76.6	25,600*	78.5	23,300*	80.3	21,100*
	90	74.6	25,100*	76.5	22,900*	78.3	20,200*
	100	72.6	24,700*	74.5	22,500*	76.3	19,200*
	110	70.6	24,200*	72.5	22,200*	74.2	18,300*
	120	68.6	23,700*	70.4	21,900*	72.1	17,500*
	130	66.5	22,200	68.4	21,500*	70.0	16,800*
	140	64.4	19,600	66.2	19,600	67.9	16,100*
	150	62.3	17,300	64.1	17,300	65.7	15,500*
	160	60.1	15,400	61.9	15,400	63.5	15,000*
	170	57.8	13,700	59.6	13,700	61.2	13,700
	180	55.5	12,200	57.3	12,200	58.8	12,200
	190	53.2	10,800	54.9	10,800	56.4	10,900
	200	50.7	9,700	52.4	9,700	53.9	9,700
	210	48.2	8,600	49.9	8,600	51.3	8,600
	220	45.5	7,600	47.2	7,600	48.6	7,700
	230	42.7	6,800	44.4	6,800	45.7	6,800
	240	39.8	6,000	41.4	6,000	42.7	6,000
60' JIB & 250' BOOM	59	81.0	26,200*				
	60	80.8	26,200*				
	70	78.9	25,800*	80.8	23,200*		
	80	77.0	25,300*	78.9	22,900*	80.6	20,600*
	90	75.1	24,900*	77.0	22,700*	78.7	20,300*
	100	73.2	24,300*	75.0	22,300*	76.7	19,300*
	110	71.3	23,800*	73.1	21,900*	74.8	18,500*
	120	69.3	23,300*	71.1	21,600*	72.8	17,700*
	130	67.3	21,800	69.1	21,300*	70.7	17,000*
	140	65.3	19,100	67.1	19,100	68.7	16,300*
	150	63.2	16,900	65.0	16,900	66.6	15,700*
	160	61.1	14,900	62.9	14,900	64.4	14,900
	170	59.0	13,200	60.7	13,200	62.3	13,200
	180	56.8	11,700	58.5	11,700	60.0	11,700
	190	54.5	10,400	56.3	10,400	57.7	10,400
	200	52.2	9,200	53.9	9,200	55.3	9,200
	210	49.8	8,200	51.5	8,200	52.9	8,200
	220	47.3	7,200	49.0	7,200	50.3	7,200
	230	44.7	6,300	46.4	6,300	47.6	6,400
	240	42.0	5,600	43.6	5,600	44.8	5,600
	250	39.1	4,800	40.7	4,800	41.8	4,900
60' JIB & 260' BOOM	61	80.9	25,700*				
	70	79.3	25,300*				
	80	77.5	24,800*	79.2	22,500*	80.9	19,900*
	90	75.6	24,400*	77.4	22,200*	79.0	19,200*
	100	73.8	23,800*	75.5	21,900*	77.2	18,500*
	110	71.9	23,300*	73.6	21,400*	75.3	17,800*
	120	70.0	22,300*	71.7	20,400*	73.3	16,800*
	130	68.1	21,100*	69.8	19,400*	71.4	16,000*
	140	66.1	18,700	67.8	18,400*	69.4	15,200*
	150	64.1	16,400	65.9	16,400	67.4	14,400*
	160	62.1	14,500	63.8	14,500	65.3	13,700*
	170	60.1	12,800	61.8	12,800	63.2	12,800
	180	58.0	11,300	59.6	11,300	61.1	11,300
	190	55.8	9,900	57.5	9,900	58.9	9,900
	200	53.6	8,700	55.3	8,700	56.7	8,800

AMERICAN HOIST & DERRICK CO.
ST. PAUL, MINNESOTA 55107

LUBRICATION INSTRUCTIONS
9520 TRUCK CRANE

DAILY (8 HRS.)	DAILY (8 HRS.)	EVERY WEEK (40 HRS.)	WEEKLY	520 HRS.	YEARLY
2 TO 4 SHOTS	6 TO 8 SHOTS	2 TO 4 SHOTS	6 TO 8 SHOTS	2 TO 4 SHOTS	REPLENISH SUPPLY

SYMB.	LUB. ITEM	PARTS LUBRICATED
A	2	SHAFT PILLOW BLOCK BEARING
B	2	BOOM HOIST DOG
C	2	SHIFTER - BOOM HOIST SHAFT
D	2	BOOM HOIST DRUM
E	2	BOOM HOIST SHAFT
F	2	DRIVE SHAFT
G	2	MAIN DRUM
H	2	FRONT DRUM
J	2	CLUTCH SHAFT
K	2	SWING BRAKE PINS

SYMB.	LUB. ITEM	PARTS LUBRICATED
L	2	VERTICAL SWING SHAFT - UPPER BEARING
M	2	VERTICAL SWING SHAFT - LOWER BEARING
N	2	CENTER PIN
P	6	SWIVEL AIR JOINT
R	--	BOOM FOOT BEARING
S	8	POWER LOAD LOWERING CHAIN
T	2	SHEAVE BEARING
U	2	HOOK ROLLER BEARING
V	2	AXLE - INNER BAIL
W	2	FLEETING SHEAVE - BOOM HOIST LINE

For "Lube Item No." See Sheet-260

For Attachments See Sheet-222

FOR ADJUSTMENT OF SWING ROLLERS, SEE OPERATORS MANUAL UNDER TAB 3 "ADJUSTMENT"

Seasonal and Climatic Variances Call For Prudence and Common Sense in Lubrication. Consult Your Lube Chart For Summer and Winter Lube Specs.

For Carrier Lubrication See Carrier Book.

NOTE:
When under continuous travel grease all fittings every 1/2 mile or 1/2 hour (except swing rollers) from bullgear down and fittings marked with (#) symbol.

BULLGEAR: See Paragraph No. 6, Sheet-210

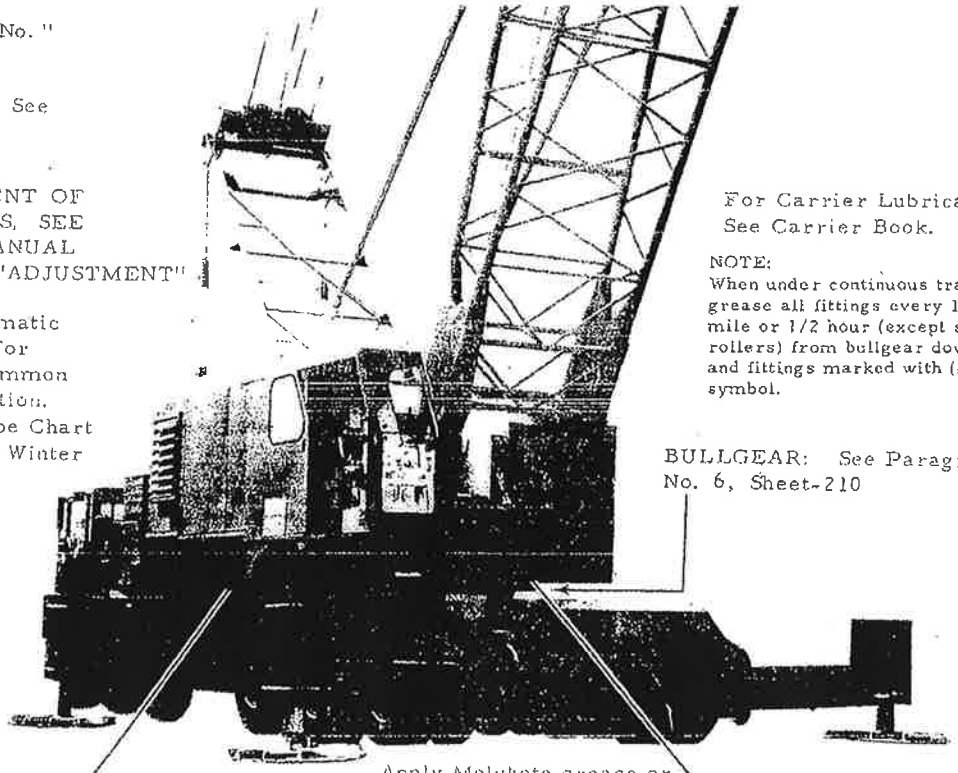

Apply Molykote grease or equal to small roller axles at reassembly.

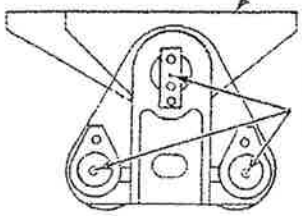

U ROLLER BEARINGS 2

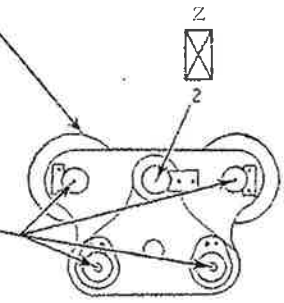

Z 2

U ROLLER BEARINGS 2

AMERICAN HOIST & DERRICK CO.
ST. PAUL, MINNESOTA 55107

BOOM LUBRICATION INSTRUCTIONS
9520 TRUCK CRANE

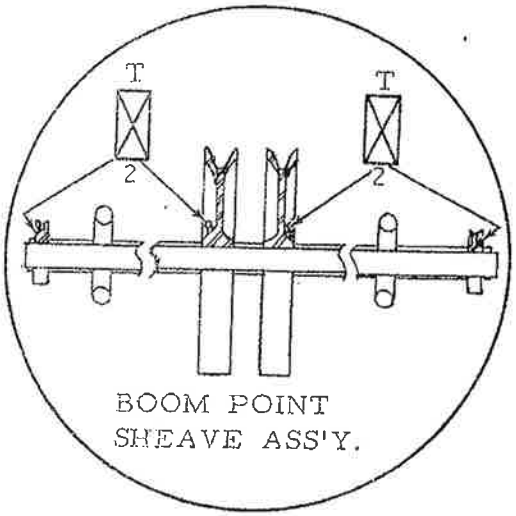

VIEW "A-A"

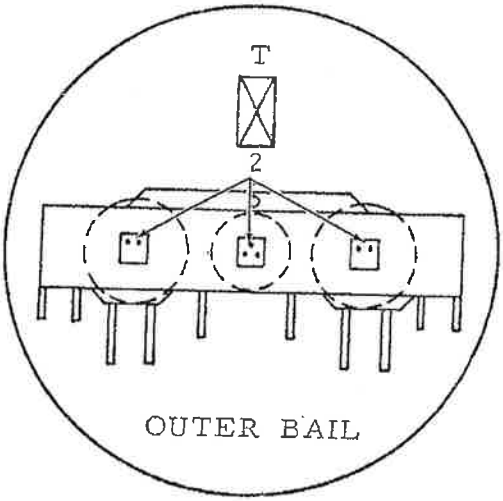

VIEW "B-B"
7 FITTINGS

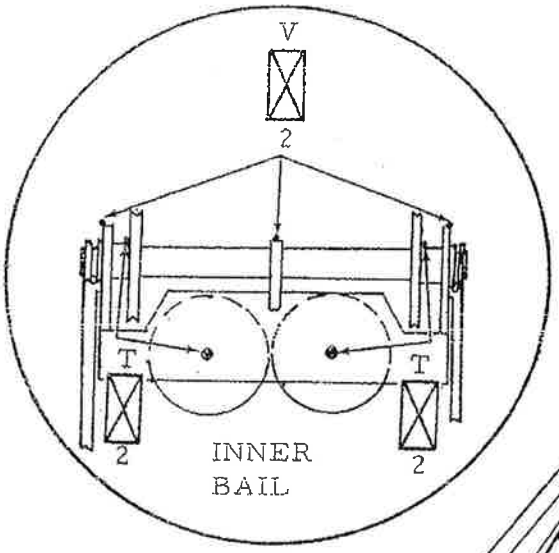

VIEW "C-C"
11 FITTINGS

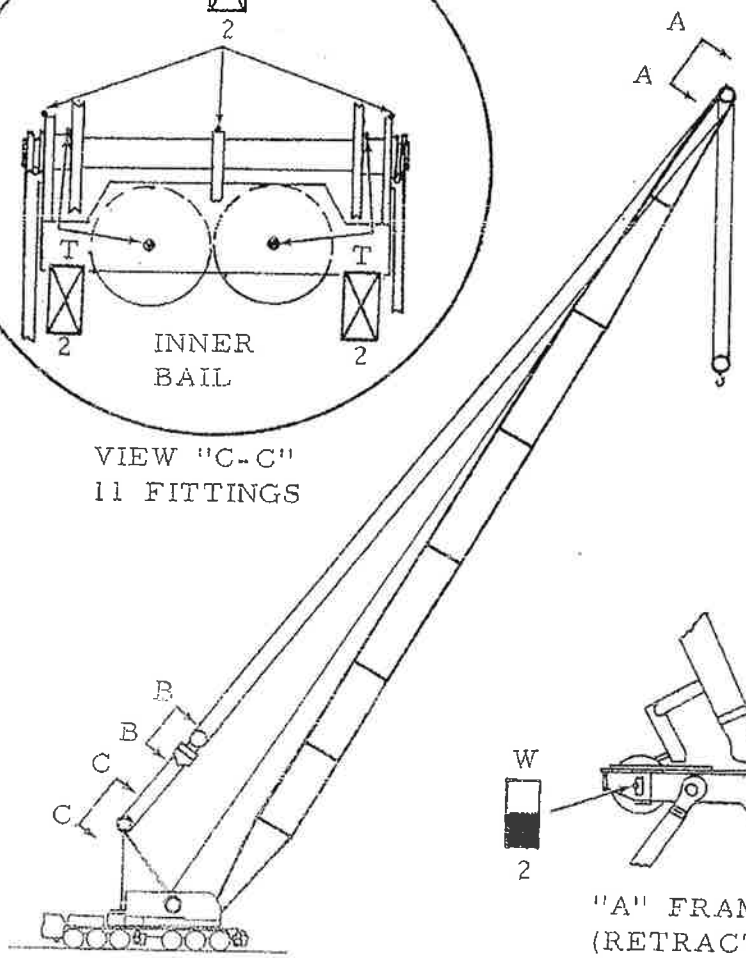

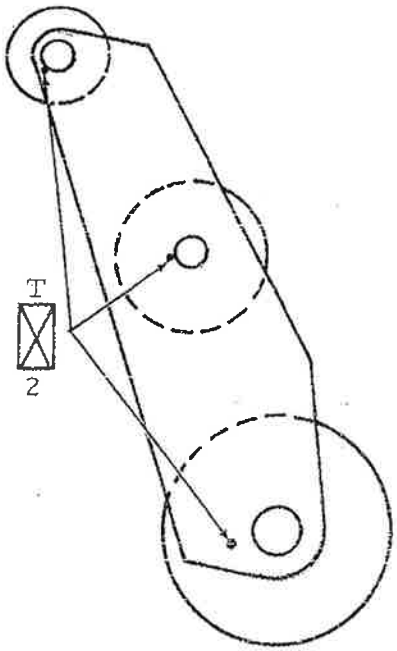

HAMMERHEAD
9 FITTINGS

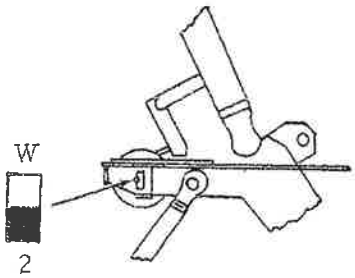

"A" FRAME
(RETRACTABLE)
2 FITTINGS

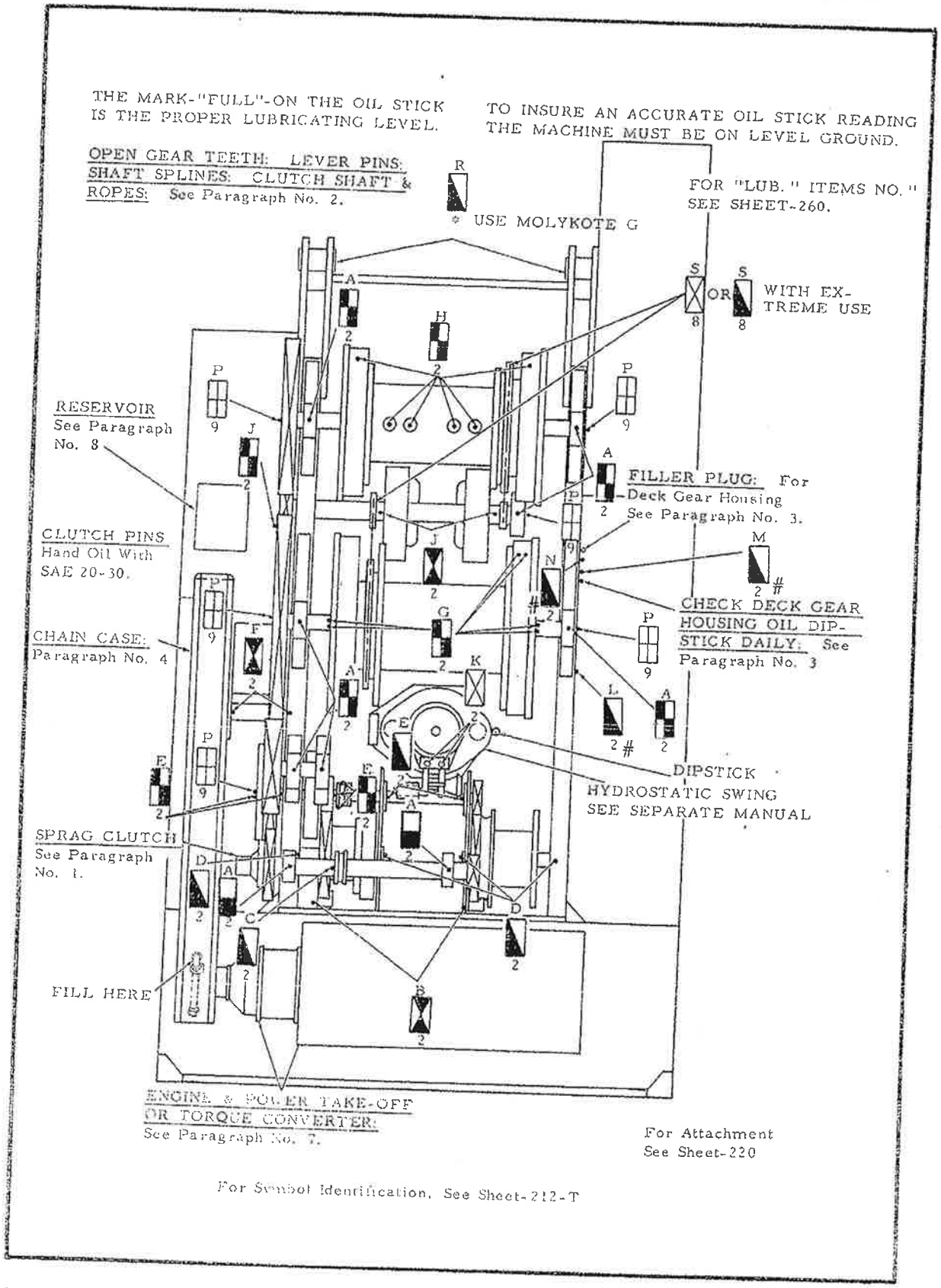
THE MARK-"FULL"-ON THE OIL STICK IS THE PROPER LUBRICATING LEVEL.
TO INSURE AN ACCURATE OIL STICK READING THE MACHINE MUST BE ON LEVEL GROUND.
OPEN GEAR TEETH: LEVER PINS: SHAFT SPLINES: CLUTCH SHAFT & ROPES: See Paragraph No. 2.
USE MOLYKOTE G
FOR "LUB." ITEMS NO." SEE SHEET-260.
WITH EXTREME USE
RESERVOIR See Paragraph No. 8
FILLER PLUG: For Deck Gear Housing See Paragraph No. 3.
CLUTCH PINS Hand Oil With SAE 20-30.
CHECK DECK GEAR HOUSING OIL DIPSTICK DAILY: See Paragraph No. 3
CHAIN CASE: Paragraph No. 4
DIPSTICK
HYDROSTATIC SWING SEE SEPARATE MANUAL
SPRAG CLUTCH See Paragraph No. 1.
FILL HERE
ENGINE & POWER TAKE-OFF OR TORQUE CONVERTER: See Paragraph No. 7.
For Attachment See Sheet-220
For Symbol Identification, See Sheet-212-T

DANGER ZONE NEAR ELECTRICAL TRANSMISSIONS LINES

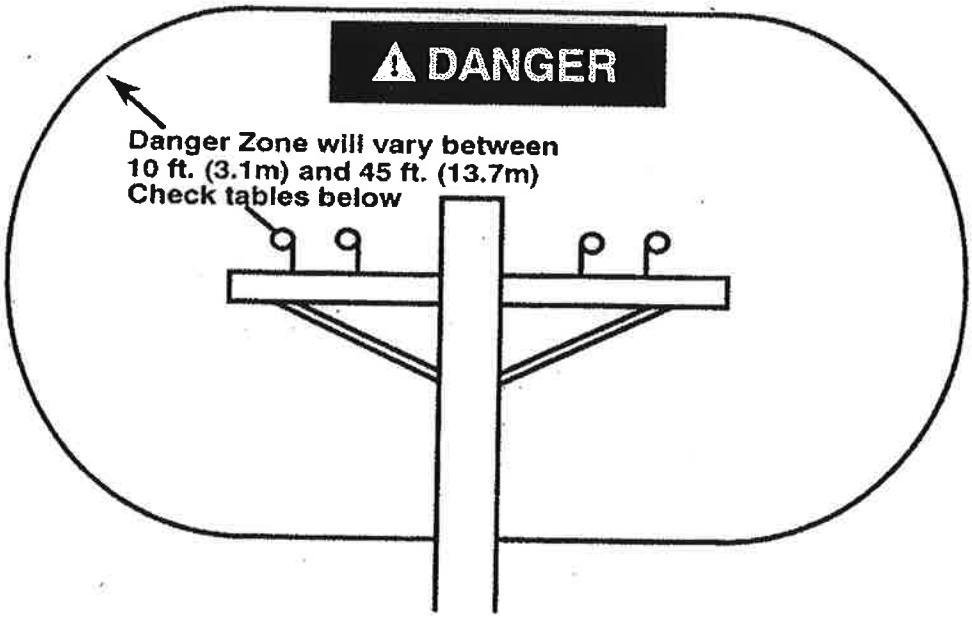

When operating near high voltage power lines:

NORMAL VOLTAGE (Phase to Phase)					MINIMUM REQUIRED CLEARANCE	
From	0	to	50	KV	10 Ft.	(3.1m)
Over	50	to	200	KV	15 Ft.	(4.6m)
Over	200	to	350	KV	20 Ft.	(6.1m)
Over	350	to	500	KV	25 Ft.	(7.6m)
Over	500	to	750	KV	35 Ft.	(10.7m)
Over	750	to	1,000	KV	45 Ft.	(13.7m)

While in transit with no load and boom or mast lowered:

NORMAL VOLTAGE (Phase to Phase)					MINIMUM REQUIRED CLEARANCE	
From	0	to	.75	KV	4 Ft.	(1.2m)
Over	.75	to	50	KV	6 Ft.	(1.8m)
Over	50	to	345	KV	10 Ft.	(3.1m)
Over	345	to	750	KV	16 Ft.	(4.9m)
Over	750	to	1,000	KV	20 Ft.	(6.1m)

NOTE: Consult local power company for specific (on site) recommendations. Always be aware of and observe applicable ordinances.

BOOM LENGTH (FEET)	RADIUS IN FEET	BOOM ANGLE DEGREES	FREE		OUTRIGGERS SET		FEET FROM BOOM POINT TO GROUND
			OVER SIDE	OVER REAR	OVER SIDE	OVER REAR	
70'	18	82		143,870	400,000	400,000	76.92
	20	79		128,690	319,376	319,376	76.25
	25	75		101,400	243,492	243,492	76.07
	30	70		81,300	195,963	195,963	73.49
	35	66		67,380	161,060	163,385	71.47
	40	61		57,170	131,210	139,654	68.96
	50	51		43,150	94,710	107,371	62.19
	60	40	30,490	33,960	73,200	86,400	52.12
	70	23	24,740	27,410	58,950	71,620	35.11
80'	18	82		134,980	363,707	363,707	86.74
	20	80		127,800	318,941	318,941	86.42
	25	77		101,020	243,054	243,054	85.40
	30	73		80,930	195,529	195,529	84.03
	35	69		67,020	160,930	162,958	82.30
	40	65		56,800	131,050	139,234	80.17
	50	57		42,800	94,520	106,970	74.58
	60	48	300,10	33,640	73,010	86,026	66.74
	70	37	24,330	27,140	58,790	71,303	55.51
	80	22	19,920	22,260	48,650	60,250	37.00
90'	19	82		130,390	339,449	339,449	96.70
	20	81		126,900	318,484	318,484	96.55
	25	78		100,610	242,586	242,586	95.65
	30	75		80,520	195,058	195,058	94.44
	35	72		66,610	160,760	162,489	92.92
	40	68		56,410	130,850	138,770	91.08
	50	61		42,420	94,280	106,518	86.28
	60	53	29,480	33,270	72,750	85,591	79.76
	70	45	23,840	26,790	58,550	70,893	70.96
	80	35	19,490	21,960	48,440	59,979	58.66
	90	20	15,990	18,160	40,850	50,880	38.76
100'	20	82		125,990	318,017	318,017	106.65
	25	79		100,190	242,102	242,102	105.84
	30	76		80,100	194,567	194,567	104.77
	35	73		66,190	160,560	161,996	103.41
	40	70		55,990	130,610	138,278	101.77
	50	64	36,570	42,010	94,010	106,033	97.56
	60	58	28,920	32,870	72,470	85,117	91.94
	70	50	23,300	26,410	58,250	70,434	84.58
	80	42	18,980	21,590	48,160	59,543	74.90
	90	33	15,540	17,840	40,600	50,640	61.62
	100	19	12,700	14,800	34,690	43,530	40.42
110'	22	82		116,780	282,309	282,309	116.47
	25	80		99,760	241,609	241,609	116.00
	30	78		79,670	194,063	194,063	115.03
	35	75		65,760	160,340	161,487	113.81
	40	72		55,550	130,360	137,768	112.33
	50	67	35,960	41,580	93,710	105,525	108.57
	60	61	28,340	32,440	72,150	84,616	103.60
	70	55	22,740	25,990	57,930	69,943	97.23
	80	48	18,440	21,190	47,830	59,066	89.11
	90	40	15,020	17,450	40,280	50,330	78.62

[illegible]ST & DERRICK CO.
[illegible] MINNESOTA 55107

MODEL 9520 TRUCK CRANE RATINGS IN POUNDS
92" HVY. DUTY TUBULAR BOOM WITH 6 SHEAVE
OFFSET TIP – 75,000 LBS. CTWT. – AMERICAN CARRIER

[illegible]TH (FEET)	RADIUS IN FEET	BOOM ANGLE DEGREES	FREE		OUTRIGGERS SET		FEET FROM BOOM POINT TO GROUND
			OVER SIDE	OVER REAR	OVER SIDE	OVER REAR	
110'	100	31	12,230	14,460	34,410	43,260	64.42
	110	18	9,870	11,980	29,670	37,580	42.00
120'	23	82		110,130	266,878	266,878	126.43
	25	81		99,330	241,111	241,111	126.13
	30	79		79,230	193,552	193,552	125.24
	35	76		65,310	160,120	160,969	124.13
	40	74		55,110	130,090	137,245	122.79
	50	69	35,340	41,140	93,400	105,002	119.38
	60	63	27,740	32,010	71,820	84,096	114.93
	70	58	22,150	25,560	57,590	69,430	109.28
	80	52	17,870	20,760	47,490	58,562	102.22
	90	46	14,470	17,040	39,940	49,990	93.39
	100	38	11,710	14,060	34,070	42,930	82.14
	110	30	9,390	11,610	29,370	37,280	67.09
	120	17	7,400	9,540	25,490	32,640	43.50
130'	25	82		98,900	240,611	240,611	136.25
	30	80		78,780	193,036	193,036	135.43
	35	77		64,870	159,880	160,444	134.40
	40	75		54,660	129,810	136,715	133.17
	50	70	34,710	40,690	93,080	104,468	130.06
	60	66	27,120	31,560	71,470	83,563	126.01
	70	61	21,550	25,120	57,230	68,901	120.92
	80	55	17,280	20,320	47,120	58,039	114.65
	90	50	13,900	16,610	39,570	49,630	106.95
	100	44	11,150	13,640	33,710	42,570	97.46
	110	37	8,860	11,210	29,020	36,930	85.51
	120	29	6,910	9,170	25,170	32,320	69.63
	130	17	5,200	7,400	21,920	28,450	44.95
140'	26	82		93,750	228,917	228,917	146.20
	30	80		78,340	192,518	192,518	145.58
	35	78		64,420	159,640	159,915	144.64
	40	76	45,040	54,210	129,530	136,180	143.56
	50	72	34,080	40,230	92,750	103,927	140.63
	60	68	26,500	31,100	71,110	83,021	136.91
	70	63	20,940	24,660	56,860	68,360	132.28
	80	58	16,690	19,870	46,740	57,502	126.61
	90	53	13,320	16,160	39,190	49,131	119.76
	100	48	10,580	13,200	33,330	42,200	111.47
	110	42	8,300	10,780	28,640	36,560	101.36
	120	35	6,370	8,750	24,800	31,960	88.73
	130	27	4,700	7,020	21,590	[illegible]	72.08
	140	16	3,220	5,510	18,830	24,630	46.33
150'	27	82		88,990	218,157	218,157	156.16
	30	81		77,890	191,997	191,997	155.72
	35	79		63,960	159,383	159,383	154.84
	40	77	44,380	53,750	129,240	135,64[illegible]	153.78
	50	73	33,440	39,770	92,410	103,380	[illegible]
	60	69	25,870	30,640	70,750	82,47[illegible]	147.[illegible]
	70	65	20,330	24,200	56,480	67,[illegible]	143.[illegible]
	80	61	16,080	19,410	46,360	56,95[illegible]	138.[illegible]
	90	56	12,720	15,710	38,800	45,868	132.0[illegible]

AMERICAN HOIST & DERRICK CO.
ST. PAUL, MINNESOTA 55107

MODEL 9520 TRUCK CRANE RATINGS IN POUNDS
92" HVY. DUTY TUBULAR BOOM WITH 6 SHEAVE
OFFSET TIP – 75,000 LBS. CTWT. – AMERICAN CARRIER

BOOM LENGTH (FEET)	RADIUS IN FEET	BOOM ANGLE DEGREES	FREE		OUTRIGGERS SET		FEET FROM BOOM POINT TO GROUND
			OVER SIDE	OVER REAR	OVER SIDE	OVER REAR	
150'	100	51	9,990	12,750	32,940	41,810	124.64
	110	46	7,720	10,340	28,250	36,180	115.79
	120	41	5,810	8,320	24,410	31,570	105.09
	130	34	4,160	6,600	21,210	27,740	91.82
	140	26		5,110	18,480	24,490	74.43
	150	16		3,790	16,110	21,670	47.67
160'	29	82		80,870	199,522	199,522	165.98
	30	82		77,450	191,476	191,476	165.83
	35	80		63,510	158,850	158,850	165.01
	40	78	43,730	53,290	128,960	135,099	164.02
	50	74	32,790	39,300	92,070	102,829	161.54
	60	70	25,240	30,170	70,380	81,917	158.34
	70	67	19,700	23,730	56,090	67,256	154.39
	80	63	15,470	18,950	45,960	56,401	149.62
	90	58	12,110	15,250	38,400	48,036	143.95
	100	54	9,390	12,290	32,530	41,387	137.24
	110	50	7,140	9,880	27,850	36,780	129.32
	120	45	5,230	7,870	24,010	31,180	119.94
	130	39	3,590	6,160	20,810	27,350	108.69
	140	33		4,690	18,090	24,100	94.80
	150	26		3,390	15,750	21,310	76.70
	160	15			13,690	18,860	48.96
170'	30	82		77,000	190,954	190,954	175.94
	35	80	50,600	63,050	158,315	158,315	175.16
	40	79	43,070	52,830	128,660	134,556	174.23
	50	75	32,150	38,830	91,730	102,275	171.91
	60	72	24,600	29,700	70,010	81,358	168.92
	70	68	19,080	23,260	55,700	66,695	165.24
	80	64	14,850	18,480	45,560	55,841	160.81
	90	61	11,500	14,780	37,990	47,477	155.57
	100	57	8,790	11,830	32,120	40,830	149.42
	110	52	6,540	9,420	27,430	35,370	142.23
	120	48	4,640	7,410	23,600	30,770	133.83
	130	43	3,010	5,710	20,400	26,940	123.95
	140	38		4,240	17,690	23,700	112.15
	150	32			15,360	20,920	97.69
	160	25			13,320	18,490	78.89
	170	15			11,510	16,329	50.21
180'	32	82		70,400	176,008	176,008	185.75
	35	81	49,940	62,600	157,780	157,780	185.30
	40	79	42,410	52,360	128,370	134,011	184.42
	50	76	31,500	38,360	91,390	101,719	182.23
	60	73	23,960	29,230	69,640	80,797	179.43
	70	69	18,450	22,790	55,310	66,131	175.98
	80	66	14,220	18,010	45,160	55,276	171.84
	90	62	10,890	14,310	37,580	46,912	166.96
	100	59	8,180	11,360	31,700	40,267	161.28
	110	55	5,930	8,950	27,010	34,857	154.68
	120	51	4,040	6,940	23,180	30,350	147.04
	130	47		5,240	19,980	26,520	138.18
	140	42		3,780	17,270	23,280	127.81

AMERICAN HOIST & DERRICK CO.
ST. PAUL, MINNESOTA 55107

MODEL 9520 TRUCK CRANE RATINGS IN POUNDS
92" HVY. DUTY TUBULAR BOOM WITH 6 SHEAVE
OFFSET TIP – 75,000 LBS. CTWT. – AMERICAN CARRIER

BOOM LENGTH (FEET)	RADIUS IN FEET	BOOM ANGLE DEGREES	FREE		OUTRIGGERS SET		FEET FROM BOOM POINT TO GROUND
			OVER SIDE	OVER REAR	OVER SIDE	OVER REAR	
180'	150	37			14,940	20,502	115.51
	160	31			12,920	18,030	100.48
	170	24			11,130	15,835	81.02
	180	14			9,520	13,853	51.42
190'	33	82	52,840	67,170	168,993	168,993	195.71
	35	81	49,270	62,140	157,244	157,244	195.42
	40	80	41,750	51,900	128,080	133,466	194.59
	50	77	30,850	37,890	91,040	101,162	192.52
	60	74	23,320	28,750	69,260	80,233	189.87
	70	70	17,810	22,310	54,920	65,564	186.63
	80	67	13,600	17,530	44,750	54,707	182.75
	90	64	10,270	13,830	37,160	46,343	178.19
	100	60	7,560	10,880	31,280	39,700	172.89
	110	57	5,330	8,480	26,590	34,291	166.78
	120	53	3,440	6,470	22,750	29,801	159.76
	130	49		4,780	19,550	26,010	151.69
	140	45		3,320	16,840	22,764	142.39
	150	41			14,520	19,952	131.56
	160	36			12,500	17,487	118.76
	170	30			10,720	15,306	103.18
	180	23			9,140	13,353	83.09
	190	14			7,700	11,576	52.60
200'	34	82	50,340	64,120	162,393	162,393	205.67
	35	82	48,800	61,680	156,707	156,707	205.53
	40	80	41,090	51,440	127,790	132,919	204.74
	50	77	30,200	37,420	90,690	100,603	202.78
	60	74	22,680	28,280	68,880	79,667	200.28
	70	71	17,180	21,840	54,520	64,994	197.21
	80	68	12,970	17,050	44,340	54,135	193.55
	90	65	9,640	13,350	36,740	45,771	189.26
	100	62	6,940	10,400	30,860	39,128	184.30
	110	59	4,710	8,000	26,160	33,720	178.60
	120	55		6,000	22,320	29,232	172.09
	130	52		4,300	19,120	25,443	164.67
	140	48			16,410	22,201	156.19
	150	44			14,090	19,392	146.46
	160	40			12,070	16,933	135.19
	170	35			10,290	14,759	121.92
	180	29			8,720	12,819	105.81
	190	23			7,310	11,071	85.10
	200	13			6,020	9,467	53.75
210'	36	82	46,280	58,930	150,830	150,830	215.49
	40	81	40,430	50,970	127,490	132,372	214.88
	50	78	29,550	36,950	90,340	100,043	213.01
	60	75	22,040	27,800	68,500	79,100	210.64
	70	72	16,540	21,360	54,120	64,422	207.73
	80	70	12,340	16,570	43,930	[illegible]	204.27
	90	67	9,010	12,870	36,320	[illegible]	200.22
	100	64	6,320	9,920	30,430	[illegible]	195.55
	110	60	4,090	7,520	25,730	[illegible]	190.21
	120	57		5,520	21,880	28,658	184.13

AMERICAN HOIST & DERRICK CO.
ST. PAUL, MINNESOTA 55107

MODEL 9520 TRUCK CRANE RATINGS IN POUNDS
92" HVY. DUTY TUBULAR BOOM WITH 6 SHEAVE
OFFSET TIP – 75,000 LBS. CTWT. – AMERICAN CARRIER

BOOM LENGTH (FEET)	RADIUS IN FEET	BOOM ANGLE DEGREES	FREE		OUTRIGGERS SET		FEET FROM BOOM POINT TO GROUND
			OVER SIDE	OVER REAR	OVER SIDE	OVER REAR	
	130	54		3,830	18,680	24,872	177.24
	140	50			15,970	21,632	169.43
	150	47			13,650	18,826	160.56
	160	43			11,630	16,371	150.42
210'	170	39			9,860	14,202	138.72
	180	34			8,290	12,269	124.99
	190	29			6,890	10,532	108.37
	200	22			5,620	8,956	87.06
	210	13			4,460	7,502	54.87
	37	82	44,050	56,310	144,040	145,264	225.44
	40	81	39,770	50,510	127,200	131,826	225.00
	50	79	28,900	36,480	89,990	99,483	223.22
	60	76	21,390	27,320	68,120	78,531	220.96
	70	73	15,900	20,870	53,720	63,849	218.20
	80	70	11,700	16,090	43,510	52,986	214.91
	90	68	8,390	12,390	35,900	44,619	211.08
	100	65	5,700	9,440	30,000	37,975	206.67
	110	62	3,470	7,040	25,290	32,568	201.63
220'	120	59		5,040	21,440	28,081	195.93
	130	56		3,350	18,240	24,296	189.49
	140	53			15,530	21,058	182.24
	150	49			13,200	18,254	174.06
	160	46			11,190	15,802	164.80
	170	42			9,420	13,637	154.27
	180	38			7,850	11,709	142.16
	190	33			6,460	9,979	127.98
	200	28			5,200	8,415	110.87
	210	22			4,050	6,987	88.97
	220	13				5,660	55.96
	39	82	[illegible]	51,870	132,120	135,509	235.26
	40	82	[illegible]	50,040	126,900	131,278	235.12
	50	79	[illegible]	36,000	89,640	98,922	233.42
	60	77	[illegible]	26,840	67,740	77,982	231.26
	70	74	[illegible]	20,390	53,320	63,275	228.62
	80	71	[illegible]	15,600	43,100	52,408	225.50
	90	69	[illegible]	11,900	35,470	44,040	221.85
	100	66	[illegible]	8,950	29,570	37,394	217.67
	110	63		6,550	24,850	31,988	212.91
	120	60		4,550	21,000	27,501	207.53
230'	130	57			17,800	23,717	201.48
	140	54			15,080	20,480	194.70
	150	51			12,760	17,678	187.09
	160	48			10,740	15,228	178.55
	170	45			8,970	13,066	168.93
	180	41			7,410	11,142	158.02
	190	37			6,010	9,417	145.51
	200	32			4,760	7,859	130.90
	210	27			3,620	6,442	113.31
	220	21				5,141	90.83
	230	12				3,926	57.03

AMERICAN HOIST & DERRICK CO.
ST. PAUL, MINNESOTA 55107

MODEL 9520 TRUCK CRANE RATINGS IN POUNDS
92" HVY. DUTY TUBULAR BOOM WITH 6 SHEAVE
OFFSET TIP – 75,000 LBS. CTWT. – AMERICAN CARRIER

BOOM LENGTH (FEET)	RADIUS IN FEET	BOOM ANGLE DEGREES	FREE		OUTRIGGERS SET		FEET FROM BOOM POINT TO GROUND
			OVER SIDE	OVER REAR	OVER SIDE	OVER REAR	
240'	40	82	38,440	49,580	126,610	130,730	245.22
	50	80	27,690	35,530	89,290	98,360	243.59
	60	77	20,100	26,360	67,360	77,392	241.53
	70	75	14,620	19,910	52,910	62,700	239.01
	80	72	10,430	15,120	42,680	51,830	236.03
	90	70	7,120	11,420	35,050	43,459	232.56
	100	67	4,440	8,470	29,130	36,813	228.58
	110	64		6,060	24,410	31,405	224.06
	120	62		4,070	20,560	26,919	218.96
	130	59			17,350	23,135	213.25
	140	56			14,640	19,899	206.88
	150	53			12,310	17,099	199.76
	160	50			10,290	14,650	191.81
	170	47			8,520	12,490	182.93
	180	44			6,960	10,569	172.96
	190	40			5,560	8,847	161.68
	200	36			4,310	7,294	148.78
	210	32			3,180	5,883	133.75
	220	27				4,593	115.69
	230	21				3,403	92.66
	240	12				2,286	58.07
250'	41	82	[illegible]	47,380	121,440	126,172	255.18
	50	80	[illegible]	35,050	88,940	97,798	253.75
	60	78	[illegible]	25,880	66,970	76,821	251.78
	70	75	[illegible]	19,430	52,510	62,124	249.37
	80	73	[illegible]	14,630	42,260	51,250	246.51
	90	70	[illegible]	10,930	34,620	42,877	243.20
	100	68	[illegible]	7,980	28,700	36,229	239.40
	110	66		5,580	23,970	30,821	235.10
	120	63		3,580	20,110	26,335	230.26
	130	60			16,900	22,551	224.85
	140	58			14,180	19,315	218.82
	150	55			11,860	16,516	212.13
	160	52			9,840	14,069	204.69
	170	49			8,070	11,910	196.42
	180	46			6,500	9,991	187.21
	190	43			5,110	8,272	176.89
	200	39			3,860	6,722	165.25
	210	35				5,316	151.97
	220	31				4,032	136.53
	230	26				2,853	118.01
	240	20				1,760	94.44
	250	12					59.10
260'	43	82	33,390	43,700	112,300	118,204	264.99
	50	80	26,280	34,580	88,590	97,236	263.90
	60	78	18,810	25,400	66,590	76,250	262.00
	70	76	13,340	18,940	52,100	61,547	259.69
	80	74	9,160	14,140	41,840	50,669	256.96
	90	71	5,860	10,440	34,190	42,294	253.78
	100	69	3,180	7,490	28,260	35,644	250.15
	110	67		5,090	23,530	30,236	246.05

X=IN PLACE
O=REMOVED

TRAVELING WEIGHT CHART

92" INNER BOOM	77" INNER BOOM	COUNTER WEIGHT	FRONT OUT RIGGER	REAR OUT RIGGER	FRONT TRIDEM LBS	REAR TRIDEM LBS	GROSS WEIGHTS LBS
O	X	X	X	X	3,720	284,610	288,330
O	X	O	X	X	45,230	168,100	213,330
O	X	O	O	X	37,060	161,250	198,310
O	X	O	X	O	51,520	146,790	198,310
O	X	O	O	O	43,350	139,950	183,300
X	O	X	X	X	6,950	284,600	291,550
X	O	O	X	X	48,460	168,090	216,550
X	O	O	O	X	40,290	161,240	201,530
X	O	O	X	O	54,750	146,780	201,530
X	O	O	O	O	46,580	139,940	186,520
O	O	O	X	X	41,740	167,600	209,340
O	O	O	O	X	33,570	160,760	194,330
O	O	O	X	O	48,030	146,300	194,330
O	O	O	O	O	39,860	139,450	179,310

TRAVELING WEIGHT CHART (METRIC)

2.34m INNER BOOM	1.96m INNER BOOM	COUNTER WEIGHT	FRONT OUT RIGGER	REAR OUT RIGGER	FRONT TRIDEM KGS	REAR TRIDEM KGS	GROSS WEIGHTS KGS
O	X	X	X	X	1,687	129,099	130,786
O	X	O	X	X	20,516	76,250	96,766
O	X	O	O	X	16,810	73,143	89,953
O	X	O	X	O	23,369	66,584	89,953
O	X	O	O	O	19,664	63,481	83,145
X	O	X	X	X	3,153	129,095	132,247
X	O	O	X	X	21,981	76,246	98,227
X	O	O	O	X	18,276	73,138	91,414
X	O	O	X	O	24,835	66,579	91,414
X	O	O	O	O	21,129	63,477	84,605
O	O	O	X	X	18,933	76,023	94,957
O	O	O	O	X	15,227	72,921	88,148
O	O	O	X	O	21,786	66,362	88,148
O	O	O	O	O	18,080	63,255	81,335

(CONTINUED)

Printed in U. S. A.
876

WIND SPEED LIMITATIONS

Boom Size	Boom or Boom Plus Jib	Operation	No operation. Lower boom to 50-60 degrees. Position rear of crane into wind.	Lower or secure boom
37"	0-140' (0-42.3m)	0-30 mph (0-13.4mps)	30-50 mph (13.4-22 mps)	Over 50 mph (22.4 mps)
37"	0-140' (0-42.3m)	0-20 mph (0-8.9 mps)	20-30 mph (8.9-13.4 mps)	Over 30 mph (13.4 mps)
46"-47"	0-170' (0-51.8m)	0-30 mph (0-13.4mps)	30-50 mph (13.4-22 mps)	Over 50 mph (22.4 mps)
46"-47"	Over 170' (51.8m)	0-20 mph (0-8.9 mps)	20-30 mph (8.9-13.4 mps)	Over 30 mph (13.4 mps)
58"-59"	0-220' (0-67.1m)	0-30 mph (0-13.4mps)	30-50 mph (13.4-22 mps)	Over 50 mph (22.4 mps)
58"-59"	Over 220' (67.1m)	0-30 mph (0-13.4mps)	30-50 mph (13.4-22 mps)	Over 50 mph (22.4 mps)
77"	0-290' (0-88.4m)	0-30 mph (0-13.4mps)	30-50 mph (13.4-22 mps)	Over 50 mph (22.4 mps)
77"	Over 290' (88.4m)	0-20 mph (0-8.9 mps)	20-30 mph (8.9-13.4 mps)	Over 30 mph (13.4 mps)
92"-94"-118"	0-360' (0-109.8m)	0-30 mph (0-13.4mps)	30-50 mph (13.4-22 mps)	Over 50 mph (22.4 mps)
92"-94"-118"	Over 360' (109.8m)	0-20 mph (0-8.9 mps)	20-30 mph (8.9-13.4 mps)	Over 30 mph (13.4 mps)
130"	0-400' (0-122m)	0-30 mph (0-13.4mps)	30-50 mph (13.4-22 mps)	Over 50 mph (22.4 mps)
130"	Over 400' (122m)	0-20 mph (0-8.9 mps)	20-30 mph (8.9-13.4 mps)	Over 30 mph (13.4 mps)

6. Crawler sideframes and truck or wagon crane outriggers must be fully extended and set to maximum width to obtain ratings listed for such on the chart. When operating in the "FREE" condition without outriggers on a truck or wagon crane, the boom must never be operated at radii for which no ratings are shown in the "Outriggers Free-Over The Side" area of the chart. Tires must be in good condition and properly inflated for operation. For truck cranes equipped with a front outrigger jack, the ratings designated "Outriggers Set-Over Side" can be used for 360 degree rotation.

7. Do not lift over the front of a truck crane either with or without outriggers. See diagrams on next page for definition of working areas with various types of cranes. If such a lift is unavoidable, consult American Crane for special instructions and suitably reduced ratings.

8. NEVER SIDELOAD THE BOOM. Such sideloading can cause structural failure or collapse. Always keep the boom point directly over the load to avoid sideloading. Operating the crane while out of level or in high winds as well as dragging a load sideways by swinging or pulling on a load while it is partially or fully attached to a structure are all causes of sideloading and must be avoided.

© AMERICAN CRANE CORPORATION 1991
Printed in U. S. A 2/78(R1-3/84)(R2-6/91)

(CONTINUED)